Wire Antennas for Ham Radio

Iulian Rosu YO3DAC / VA3IUL,

http://www.qsl.net/va3iul

***Note:** Dimensions of the antennas presented below are either in: feet ('), inch ("), meters (m), or centimeters (cm)*

01 - Tee Antenna
02 - Half-Lamda Tee Antenna
03 - Twin-Led Marconi Antenna
04 - Swallow-Tail Antenna
05 - Random Length Radiator Wire Antenna
06 - Windom Antenna
07 - Windom Antenna - Feed with coax cable
08 - Quarter Wavelength Vertical Antenna
09 - Folded Marconi Tee Antenna
10 - Zeppelin Antenna
11 - EWE Antenna
12 - Dipole Antenna - Balun
13 - Multiband Dipole Antenna
14 - Inverted-Vee Antenna
15 - Sloping Dipole Antenna
16 - Vertical Dipole
17 - Delta Fed Dipole Antenna
18 - Bow-Tie Dipole Antenna
19 - Bow-Tie Folded Dipole Antenna for RX
20 - Multiband Tuned Doublet Antenna
21 - G5RV Antenna
22 - Wideband Dipole Antenna
23 - Wideband Dipole for Receiving
24 - Tilted Folded Dipole Antenna
25 - Right Angle Marconi Antenna
26 - Linearly Loaded Tee Antenna
27 - Reduced Size Dipole Antenna
28 - Doublet Dipole Antenna
29 - Delta Loop Antenna
30 - Half Delta Loop Antenna
31 - Collinear Franklin Antenna
32 - Four Element Broadside Antenna
33 - The Lazy-H Array Antenna
34 - Sterba Curtain Array Antenna
35 - T-L DX Antenna
36 - 1.9 MHz Full-wave Loop Antenna
37 - Multi-Band Portable Antenna
38 - Off-center-fed Full-wave Doublet Antenna
39 - Terminated Sloper Antenna
40 - Double Extended Zepp Antenna
41 - TCFTFD Dipole Antenna
42 - Vee-Sloper Antenna
43 - Rhombic Inverted-Vee Antenna
44 - Counterpoise Longwire
45 - Bisquare Loop Antenna
46 - Piggyback Antenna for 10m
47 - Vertical Sleeve Antenna for 10m
48 - Double Windom Antenna
49 - Double Windom for 9 Bands
50 - Collinear Trap Antenna
51 - Short Dipole Antenna for 40m - 80m - 160m
52 - Center Fed-Zepp Antenna for 80m - 40m
53 - All Bands Antenna
147 - KE4PT OCEF All-Band Dipole
148 - Wire Quad Antenna for 40m
149 - Inclined Dipole Antenna for 80m, 40m
150 - Pyramidal Wire Antenna for 80m
151 - Random Wire Antenna All Bands
152 - Multiband Dipole Antenna for 80m, 40m,15m, 10m
153 - Slim Jim Wire Antenna for 4m
154 - Delta Loop for 6m
155 - Re-Configurable Antenna for 160m and 80m
156 - Very Low Frequency Inverted-L Antenna
157 - Reduced Size Half Sloper Antenna for 160m
158 - Tree-Mounted HF Antenna
159 - Multiband Vertical Antenna for 80m, 40m, 20m
160 - Marconi Antenna for 136 kHz
161 - Simple Killer Antenna for 40m
162 - Stub-Directed V Antenna for 80m
163 - KT0NY Over-and-Under DX Antenna for 20m
164 - Horizontal Loop Antennas
165 - Ribbon J-Pole for 2m
166 - Dual Band Ribbon J-Pole for 2m, 70cm
167 - Square Vertical Loop Antenna for 40m
168 - Tri-Band Quad Antenna for 20m, 15m, 10m
169 - 3D Quad Antenna for 80m, 40m, 20m, 15m, 10m
170 - Sloping Wire Antenna for 30m, 20m, 17m, 15m, 12m, 10m
171 - Broadband Dipole Antenna with Coaxial Resonator for 80m
172 - Resonant Feedline Dipole Antenna for 80m
173 - Dual-Band Loading Wire Antenna for 80m, 30m
174 - Stub Matching Antennas
175 - J-Style Vertical Wire Antenna for 10m
176 - Dual Band Vertical with Zepp Feeders for 40m, 20m
177 - RCA Double Doublet for 40m to 12m
178 - RCA Spiderweb Antenna for 40m to 6m
179 - Folded Dipole with Shorted Straps
180 - Twin-Lead Marconi Antenna for 160m, 80m
181 - Broadband Antenna Quarter-Wave Balun for 80m
182 - Three-Quarter-Wave Folded Doublet for Dual-Band
183 - Three-Quarter-Wave Folded Doublet No-Switch for Dual-Band
184 - Wideband Omni-Directional Discone Antenna
185 - Wideband Rhombic Antenna for 40m to 10m
186 - Pre-Cut Linear Array Antenna 3dB-Gain for 40m
187 - X-Array Antenna 6dB-Gain for 20m, 15m, 10m
188 - Double-Bruce Array Antenna 5dB-Gain for 20m, 10m
189 - Bi-Square Broadside Array 4dB-Gain for 20m, 15m, 10m
190 - Six-Shooter Broadside Array 7.5dB-Gain for 20m, 15m, 10m
191 - Triplex Flat-Top Beam 4.5dB-Gain for 20m, 15m, 10m
192 - Dual-Band Tilt Antenna for 20m, 10m
193 - Super Space Multiband Dipole Antenna for 80m to 10m
194 - Bi-Square Beam Antenna Gain=5.5dB for 10m
195 - Cousin of G5RV Multiband Antenna for 40m to 10m
196 - Cayman Quad Antenna for 20m
197 - Hentenna Gain=3dB with Bazooka Match for 6m

54 - All-Bands Dipole Antenna
55 - Multiband Z Antenna
56 - Multiband Dipole Antenna
57 - Five-Bands No-Tuner Antenna
58 - Dualband Full-wave Loop Antenna for 80m-40m
59 - Loop Antenna for 10m
60 - Lazy Quad Antenna for 10m
61 - Tri-band Delta Loop Antenna for 80m - 40m - 30m
62 - Dual-band Loop Antenna for 30m - 40m
63 - Wire-Beam Antenna for 80m
64 - Dual-Band Sloper Antenna
65 - Inverted-V Beam Antenna for 30m
66 - ZL-Special Beam Antenna for 15m
67 - Half-Sloper Antenna for 160m
68 - Two-Bands Half Sloper for 80m - 40m
69 - Linear Loaded Sloper Antenna for 160m
70 - Super-Sloper Antenna
71 - Tower Pole as a Vertical Antenna for 80m
72 - Clothesline Antenna
73 - Curtain Zepp Antenna for 160m, 80m, 40m
74 - Collinear Array Antenna for 40m, 30m, 20m
75 - 160m Inverted Delta Loop
76 - Half Rhombic Unidirectional Vertical for 20m to 6m
77 - Capacitance Loaded Vertical Antenna for 160m
78 - Fan Dipole Antenna for 80m to 6m
79 - Wire Ground Plane Antenna
80 - Inverted Delta Loop Antenna for 160m
81 - Inverted-L for 160m
82 - 300ohm-Ribbon Dual Band Dipole
83 - Tri-Band Beam for 20m, 15m, 10m
84 - Mini-Horse Yagi Antenna
85 - Backpack J-Pole Antenna for 10m, 6m, 2m
86 - Fan-Dipole Antenna for 80m, 40m, 20m
87 - Capacity Tuned Folded Loop Antenna for 20m
88 - Indoor Loop Antenna for 80m to 30m
89 - Indoor Loop Antenna for 80m
90 - Double-Delta Antenna 80m and 40m
91 - Inductance-Loaded Shortened Dipole for 160m
92 - V-Beam Antenna for 15m
93 - Picnic Vertical Wire Antenna
94 - Laid-Back Quad Antenna for 80m
95 - Phased Loop Antenna
96 - Loop Antenna for TX for 160m
97 - Morgain-Dipole Antenna for 160m and 80m
98 - ZL-Special for 20m, 15m, 10m
99 - Biconical Antenna
100 - Directive Delta-Birdcage Antenna for 20m to 10m
101 - Dual Polarization Antenna for 80m and 40m
102 - Directive 300-ohm-Ribbon Folded Dipole for 15m
103 - Miniature Directive Antenna for 10m
104 - Biquad Antenna 12dBi-Gain for 2.4GHz
105 - Dual-Rhomboid Antenna for 435MHz to 870MHz
106 - Double-Bazooka Antenna for 80m
107 - J-Style Antenna
108 - Vertical / Horizontal / Circular Polarization Antenna
109 - Coax Inverted-L Antenna for 80m
110 - Indoor Compact Loop Antenna for 80m
111 - Helix Antenna
112 - Novice Vertical Antenna for 80m, 40m, 15m, 10m
113 - Stub-Loaded Shortened Dipole for 80m
114 - Six-Band Wire-Stub Trap Antenna for 40m-10m
198 - X-Beam Antenna Gain=3dB for 20m
199 - Twin Delta Loop Antenna Gain=6dB for 160m, 80m, 40m
200 - Inverted-V Beam Antenna for 30m
201 - FD4 Windom Antenna for 80m, 40m, 20m, 10m
202 - Two Elements Phased Delta Loop for 40m
203 - Three Elements Wire Yagi for 10m
204 - Low Radiation Angle Full-Wave Loop Antenna for 80m
205 - Collinear Antenna Gain=3dB for 2m
206 - X-Ray Monoband Antenna Gain=6.5dBd
207 - Broadside Collinear Curtain Array for 20m
208 - Shrunk Loop Antenna for 80m, 40m
209 - λ/3 Multiband Dipole for 40m, 20m, 17m, 15m, 13m, 10m
210 - K3LR Sloper Antenna Gain=3dB for 160m
211 - Mini Folded Vertical Monopole Antenna for 160m, 80m, 40m
212 - Three Band Dipole for 80m, 40m, 20m
213 - Stub Matched Dipole Antenna
214 - Inverted-Vee Antenna with Bazooka Match
215 - Multiband Long Wire Antenna for 40m, 20m, 15m, 10m
216 - Converted Vee Antenna for 80m, 40m
217 - Swiss Quad Antenna for 20m, 15m, 10m
218 - Japanese Quad Antenna for 20m, 15m, 10m
219 - Seven-Elements Triangle Beam Antenna for 20m
220 - Log Periodic Wire Antenna for 40m
221 - Three-Elements 90-degrees Wire Beam for 20m
222 - Two-Elements Wire Beam for 20m
223 - Suitcase-Fit Dipole Antenna for 80m, 40m, 20m
224 - Multiband Coaxial Dipole for 80m, 40m
225 - Vertical Log Periodic Antenna for 80m, 40m
226 - Inverted Vertical Log Periodic Antenna for 40m
227 - Double Extended Zepp Antenna Gain=7dB for 15m
228 - Double Lazy-H Antenna G=10dB for 70cm
229 - Wire Log Periodic Antenna G=12dB for 15m, 20m
230 - Five-Elements Vertical Log Periodic for 80m, 40m, 20m
231 - Sloping Delta Loop Antenna for 40m
232 - Doublet Antenna for 160m
233 - Log Periodic Wire Beam for 40m
234 - G3LDO Wire Beam Antenna for 20m, 15m, 10m
235 - Phased Delta Loop Array for 20m
236 - Dual Band V-dipole for 80m, 40m
237 - Collinear Array 5dB-Gain for 15m
238 - Two-Band Quad Loop Antenna 80m, 40m
239 - K7CW Quad Antenna
240 - Broadband Short Dipole for 80m
241 - Off-Center Fed Dipole for 40m, 20m, 10m
242 - Broadband Sloper Antenna for 80m
243 - Two-Frequency Dipole Antenna for 80m
244 - Top Loaded Vertical Antenna for 160m
245 - Two Loop Beam Antenna for 20m, 15m
246 - Corner-Fed Delta Loop Antenna for 80m, 40m, 20m
247 - Loaded Delta Loop Antenna for 40m, 20m
248 - Compact Size Dipole for 80m
249 - JAWS 3dB Gain Antenna for 40m
250 - Inverted-V Antenna for 160m
251 - Lazy-U Antenna for 160m
252 - AF3V Compact Antenna for 160m
253 - Hot Beam Wire Antenna for 40m
254 - Sloping Delta Loop for 40m
255 - K6FD Multiband Antenna with T-tuner
256 - Dual Band Dipole Antenna for 17m, 10m
257 - Compact Travel Dipole Antenna for 10m, 15m, 20m

115 - Multiband Half-Wave Delta-Loop Antenna
116 - Hybrid Vee for 20m, 17m
117 - Six-Shooter Array Antenna, Gain=7.5dB
118 - Multiband Ground-Plane Antenna for 10m, 15m, 20m
119 - Wire Superbeam Antenna for 10m, 15m, 20m
120 - Two Elements Delta-Loop Antenna
121 - Sterba Curtain Antenna
122 - Half-Wave Vertical Zepp Antenna
123 - Lazy-Loop Antenna for 40m
124 - Terminated Folded Dipole for 80m, 40m
125 - Short-Fat Antenna for 15m
126 - Cobra Antenna for 80m
127 - Log-Periodic Wire Antenna for 20m, 15m, 10m
128 - 5-Element Log-Periodic Vertical Antenna for 80m, 40m, 20m
129 - 2m Vertical Wire Antennas
130 - Earth-Mover Inverted-V Antenna for 40m
131 - Coax-Cable Collinear Antennas
132 - Double Bobtail Antenna for 20m
133 - Collinear Zepp Antenna
134 - Taylor Vee Antenna for 20m
135 - Collinear Vertical Antenna 6dB-Gain for 2m, 1.3m, 73cm
136 - Bi-Loop Antenna for 20m
137 - Wire Beam 6dBd-Gain for 10m
138 - Sloping Diamond Antenna 4dB-Gain for 40m
139 - Twisted Loop Antenna for 160m
140 - DX RX Loop Antenna for 160m
141 - Hentenna 3dB-Gain for 10m, 6m, 2m
142 - VK2AAR Wire Antenna for 20m
143 - 2-Elements Quad Antenna for 6m
144 - Hula-Loop Bidirectional 6dB-Gain Antenna for 17m
145 - Moxon Rectangle Beam for 15m-10m
146 - Double-D Beam 4dB-Gain
258 - End-Fire Antenna for 160m, 80m, 40m, 20m
259 - Four Band Loop for 40m, 20m, 15m, 10m
260 - Carolina Windom Antenna for 80 to 10m
261 - Shortened Loaded Dipole for 40m
262 - Shortened Loaded Dipole for 80m
263 - Low Radiation Angle Inverted Delta Loop for 80m
264 - Compact Dipole Antenna for 40m, 15m
265 - Vertical Delta Loop for 40m to 10m
266 - Delta Loop Antenna for 17m
267 - Bi-Square Beam Gain=3dBd for 17m
268 -Trap Dipole Antenna for 17m,13m
269 - Hanging Unipole Antenna for 160m, 80m
270 - Wideband Sloping Vee Antenna - 30m to 6m
271 - 5/8 Wavelength Antenna
272 - C-Pole Vertical Antenna
273 - Bobtail Antenna for 30m
274 - Bobtail Antenna for 40m
275 - Two Elements Vertical Loop Antenna for 40m
276 - Double Extended Zepp Antenna for 40m
277 - Reversible Moxon Flip Beam for 40m
278 - Spitwire Antenna for 40m
279 - Fork Antenna for 40m
280 - Veebeam Antenna 3dB-Gain for All Bands
281 - Vertical Moxon Antenna for 10m
282 - Half-Square Antenna for 30m
283 - Rotatable Vertical Delta Loop for 20m
284 - Mini-Horse Antenna 10dB-Gain for 40m-to-2m
285 - Compact Moxon Antenna 5dB-Gain for 40m
286 - Two Elements Sloping Delta Loop 8dB-Gain for 10m
287 - Two Elements Phased Vertical Antenna 3dB-Gain for 40m

---

01 - Tee Antenna

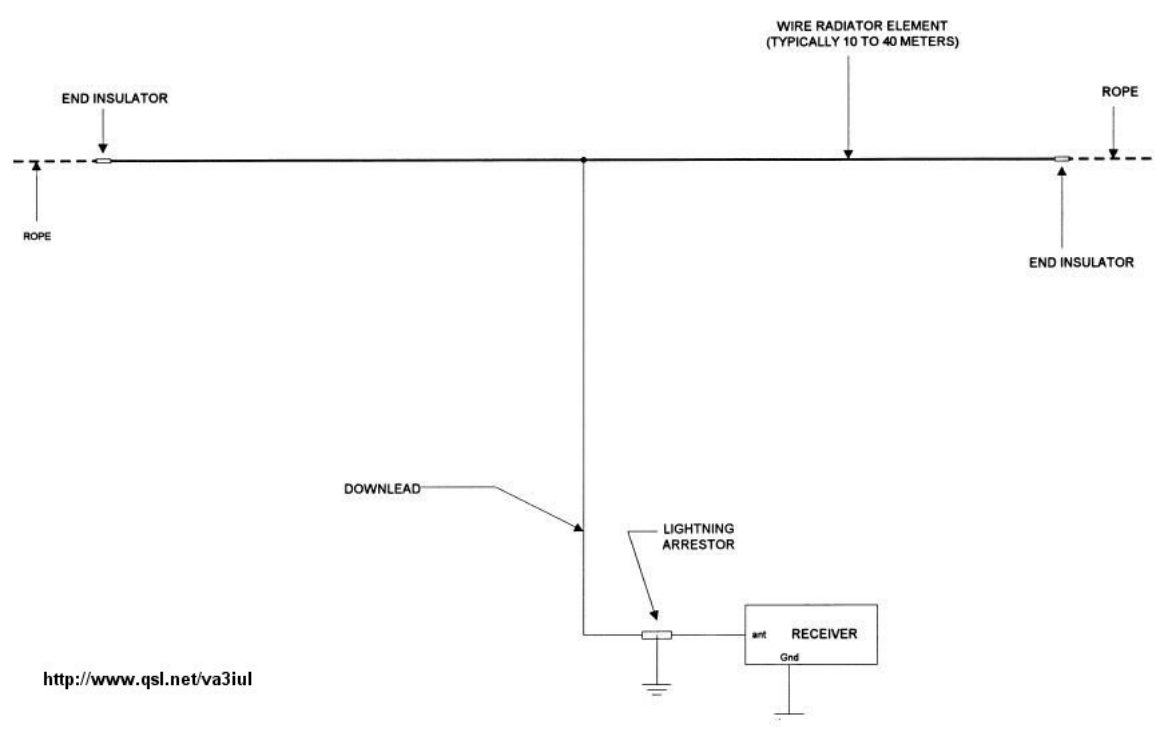

02 - Half-Lamda Tee Antenna

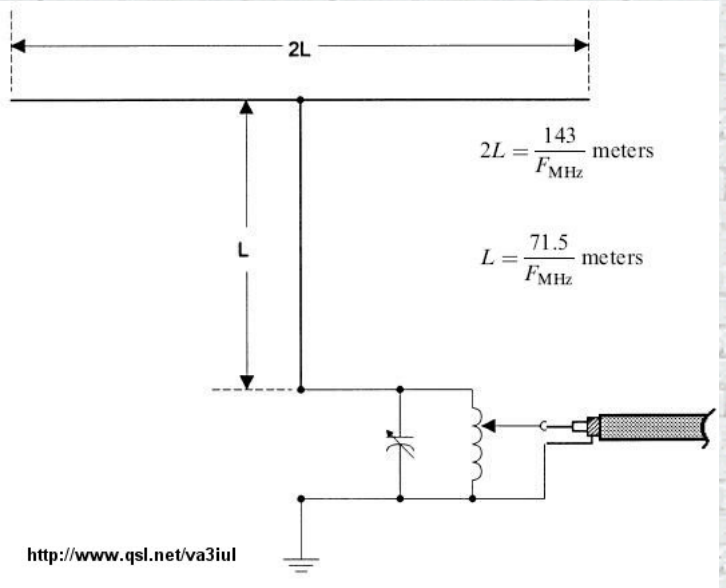

03 - Twin-Led Marconi Antenna

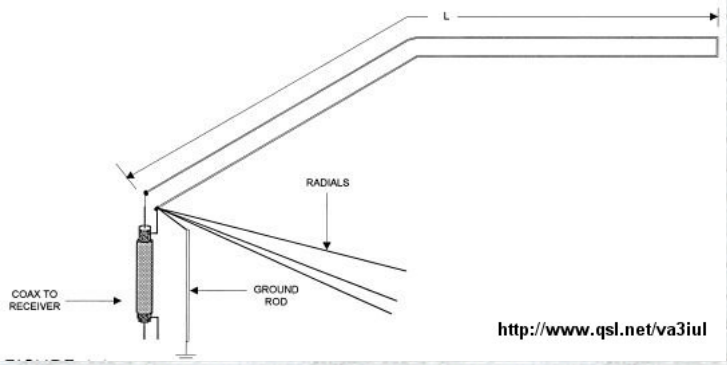

04 - Swallow-Tail Antenna

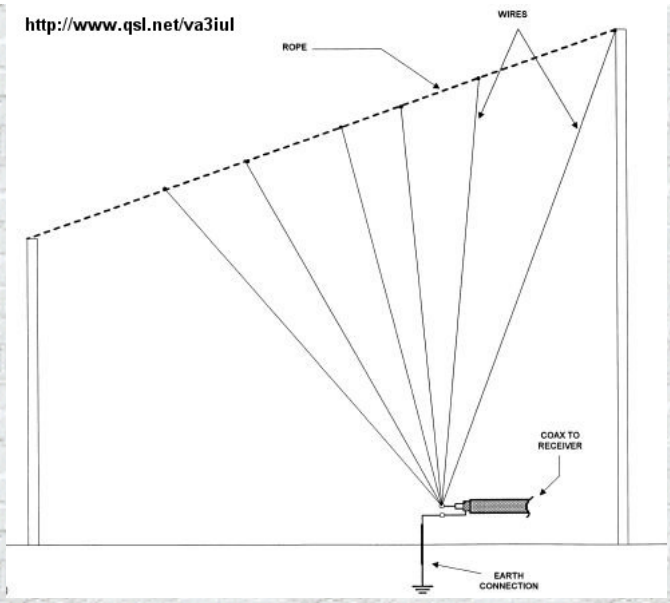

05 - Random Length Radiator Wire Antenna

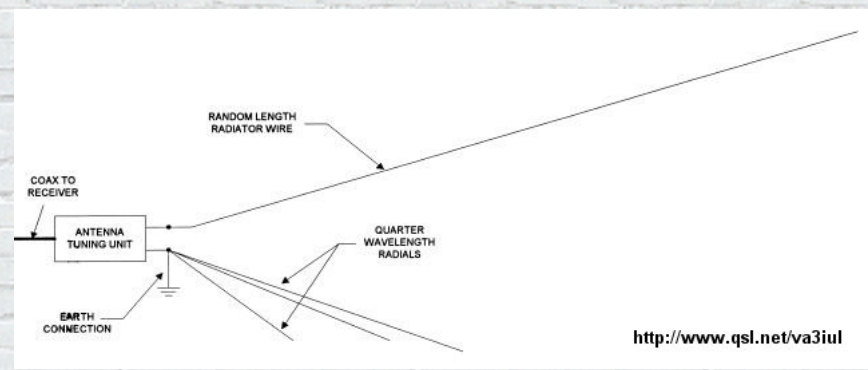

06 - Windom Antenna

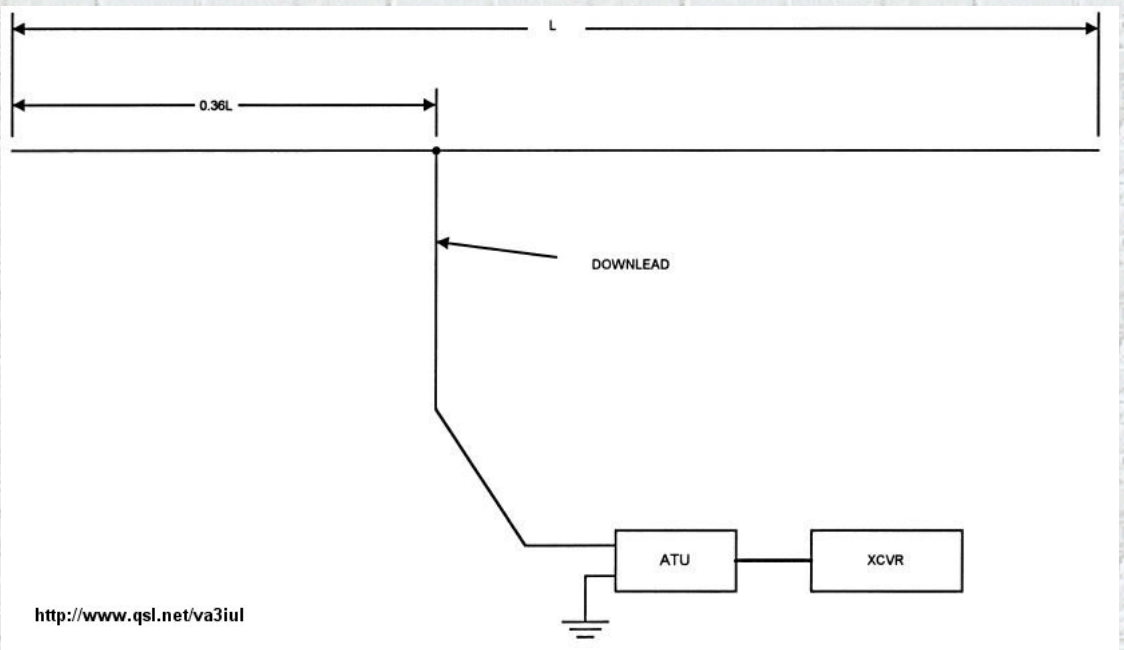

07 - Windom Antenna - Feed with coax cable

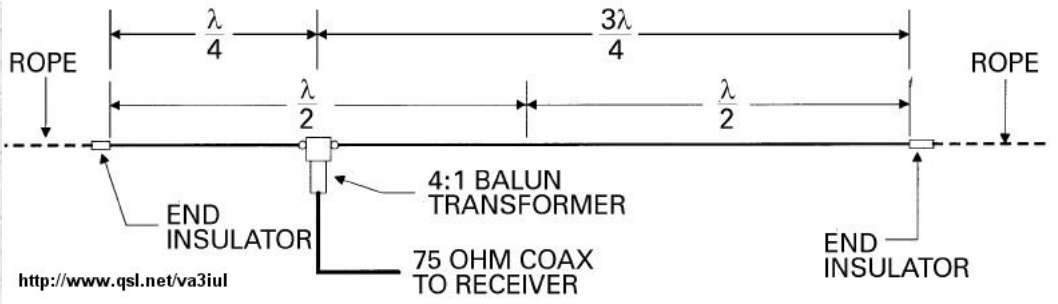

08 - Quarter Wavelength Vertical Antenna

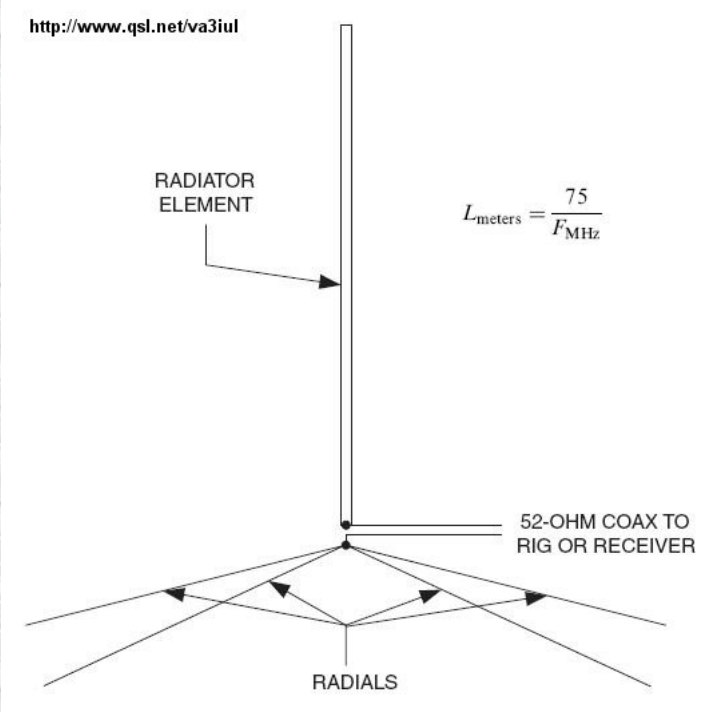

09 - Folded Marconi Tee Antenna

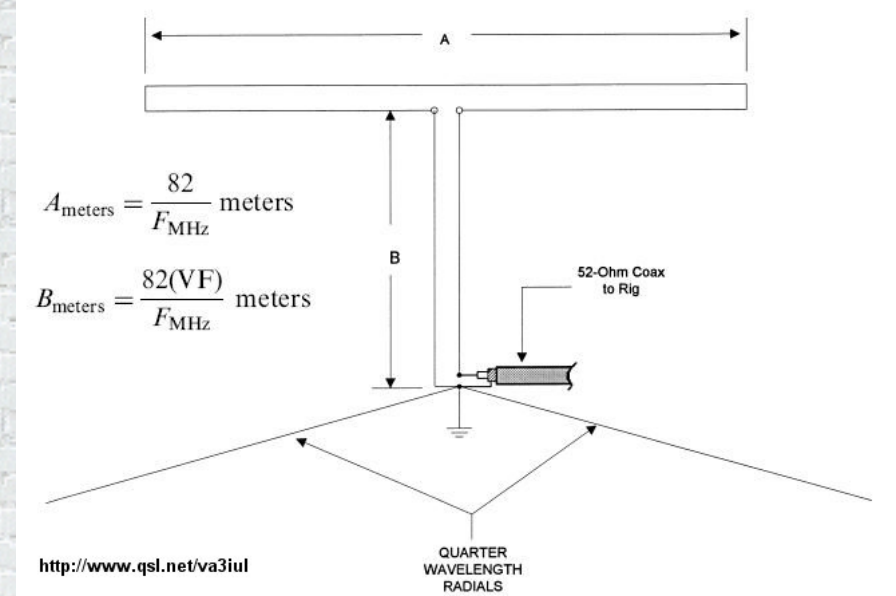

10 - Zeppelin Antenna

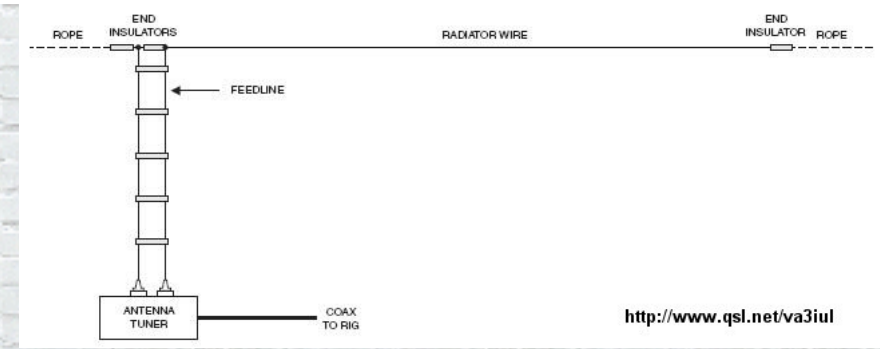

11 - EWE Antenna

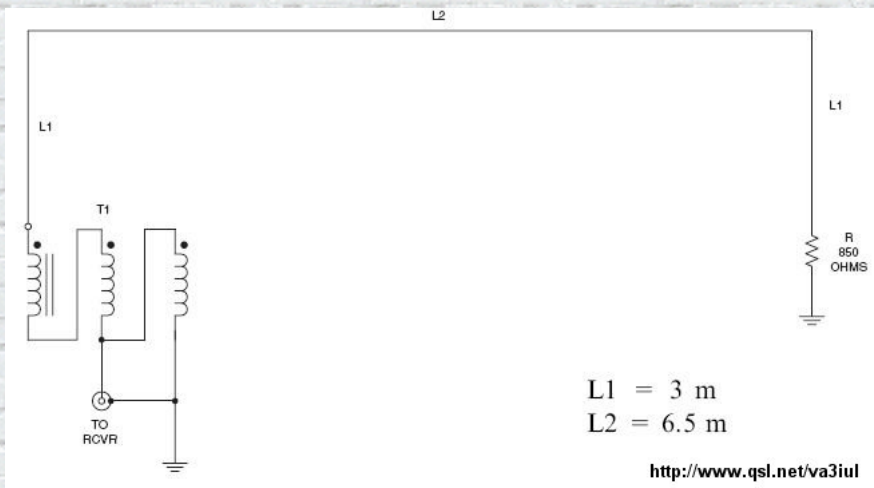

12 - Dipole Antenna - Balun

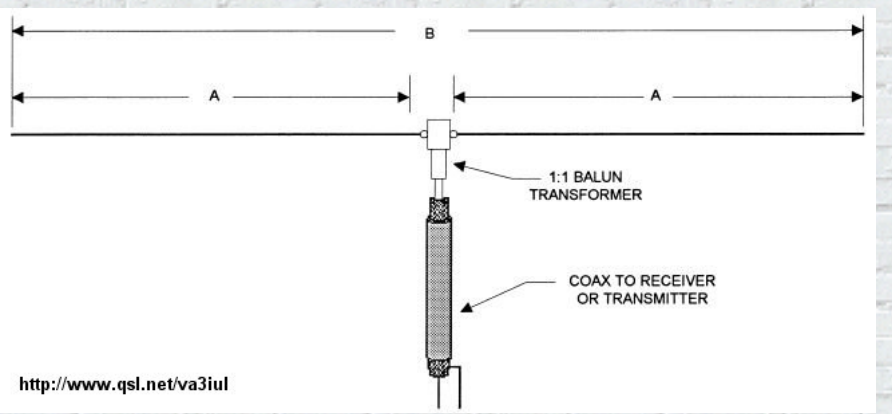

13 - Multiband Dipole Antenna

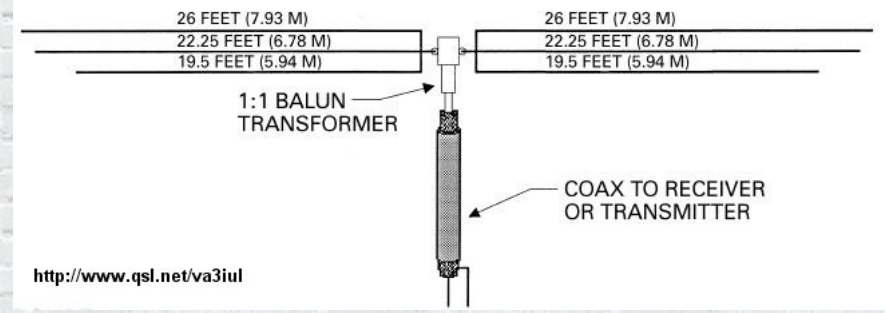

14 - Inverted-Vee Antenna

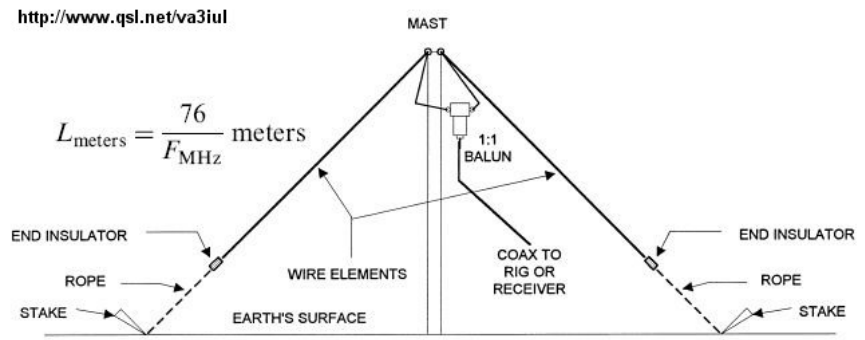

15 - Sloping Dipole Antenna

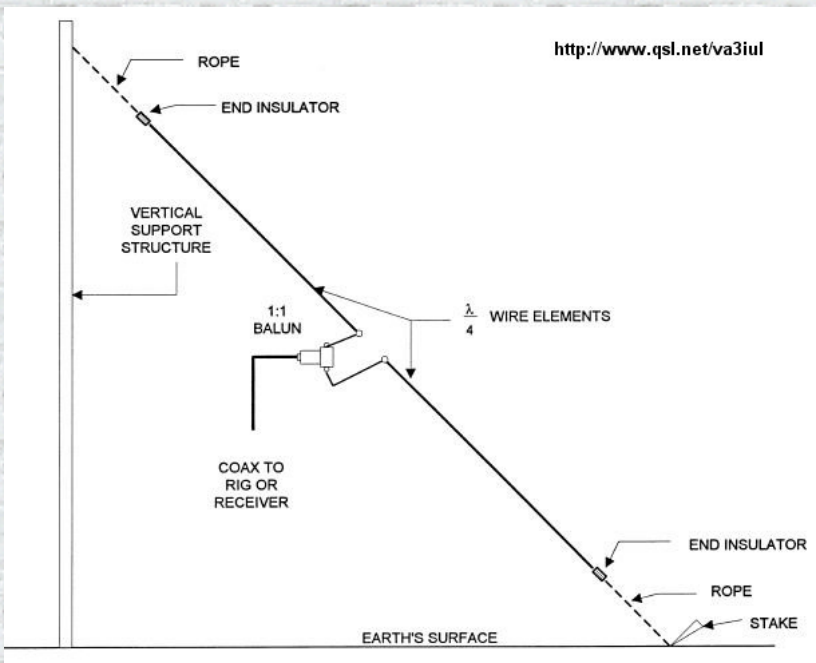

16 - Vertical Dipole

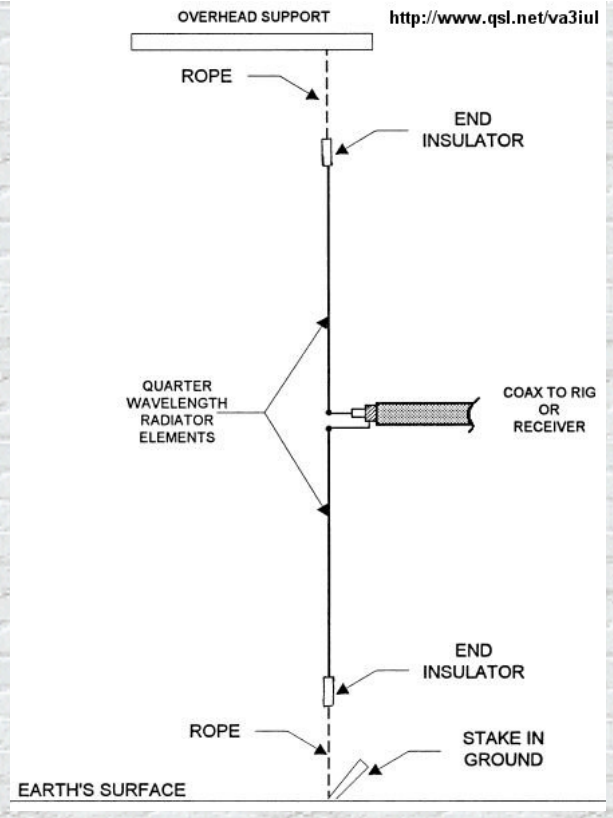

17 - Delta Fed Dipole Antenna

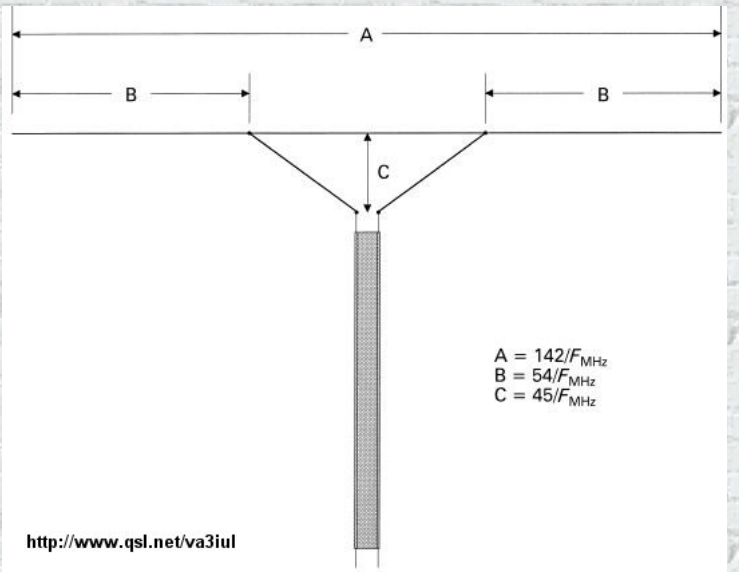

18 - Bow-Tie Dipole Antenna

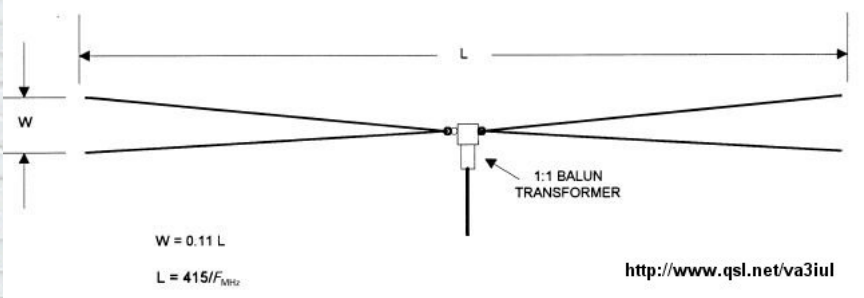

19 - Bow-Tie Folded Dipole Antenna for RX

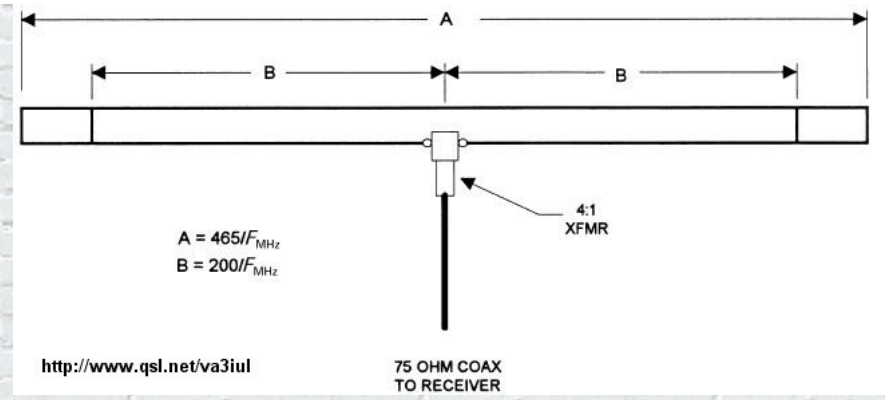

20 - Multiband Tuned Doublet Antenna

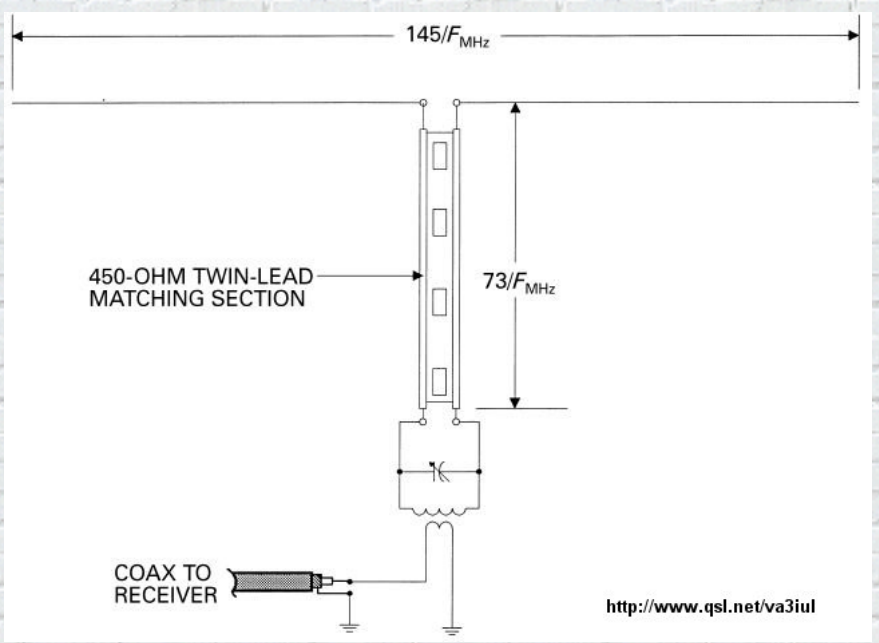

21 - G5RV Antenna

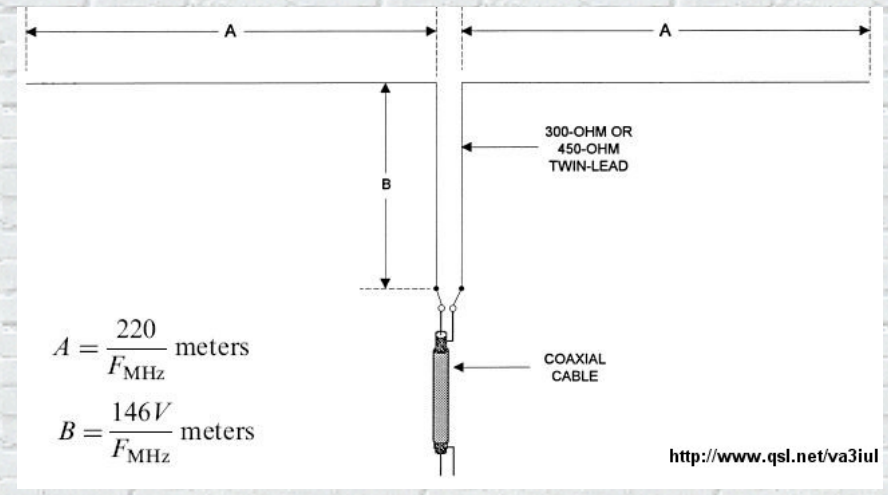

22 - Wideband Dipole Antenna

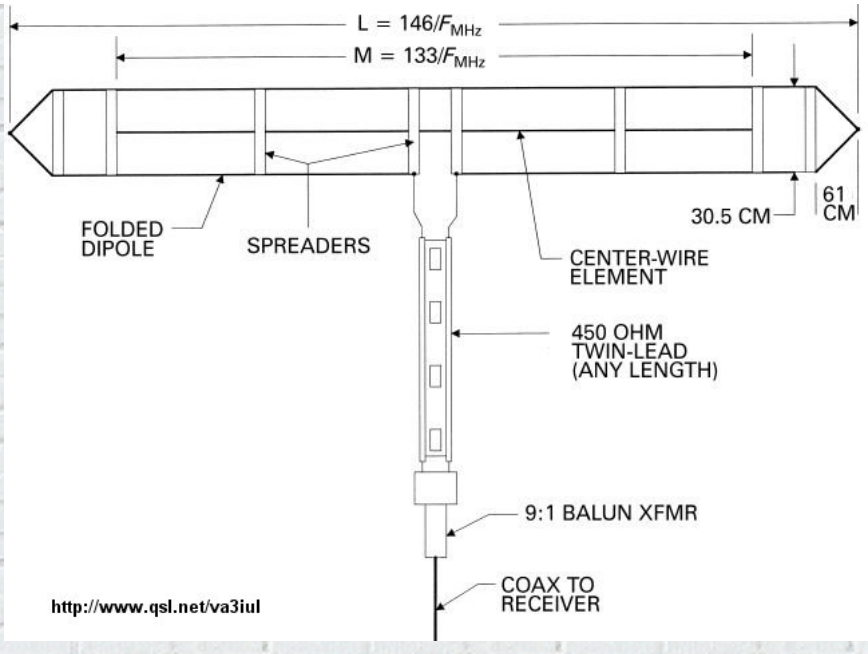

23 - Wideband Dipole for Receiving

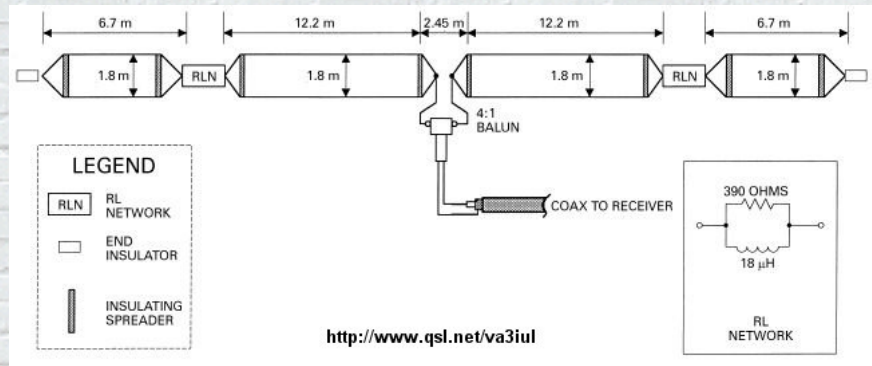

24 - Tilted Folded Dipole Antenna

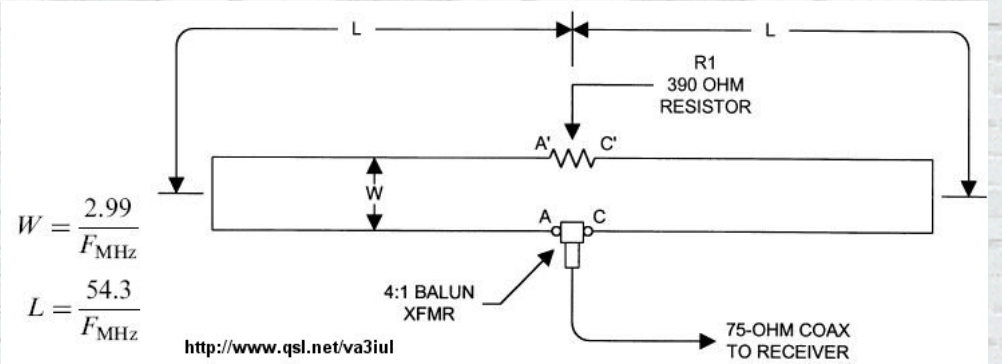

25 - Right Angle Marconi Antenna

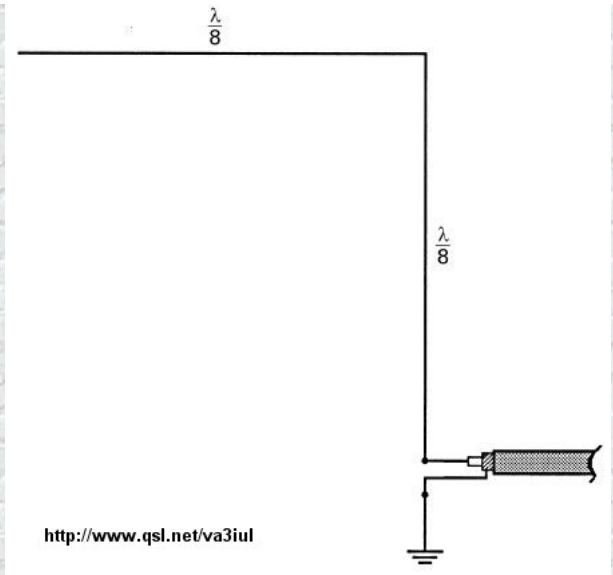

26 - Linearly Loaded Tee Antenna

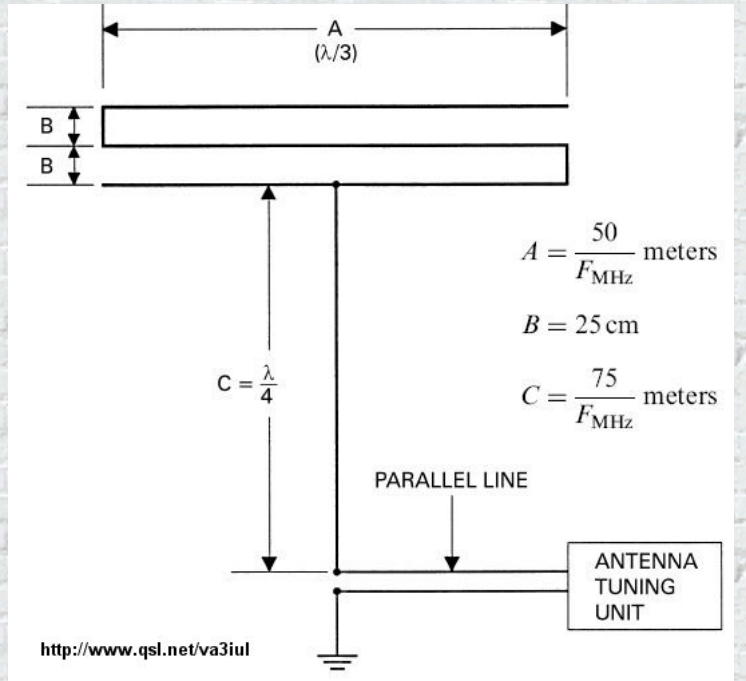

27 - Reduced Size Dipole Antenna

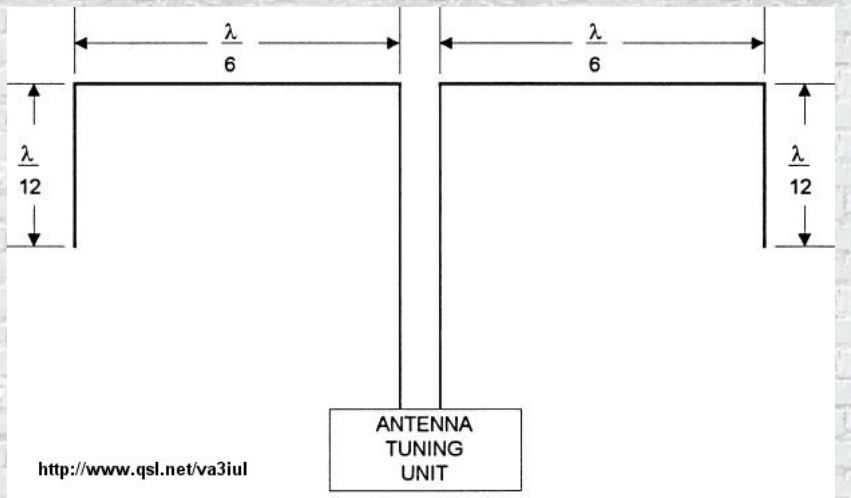

28 - Doublet Dipole Antenna

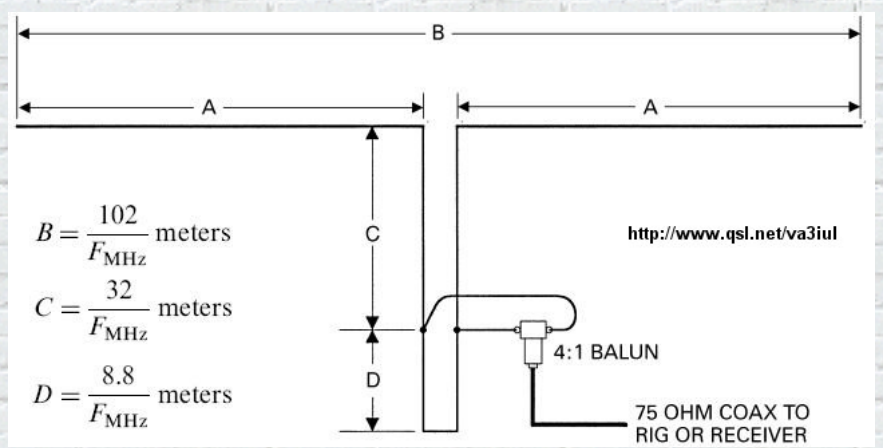

29 - Delta Loop Antenna

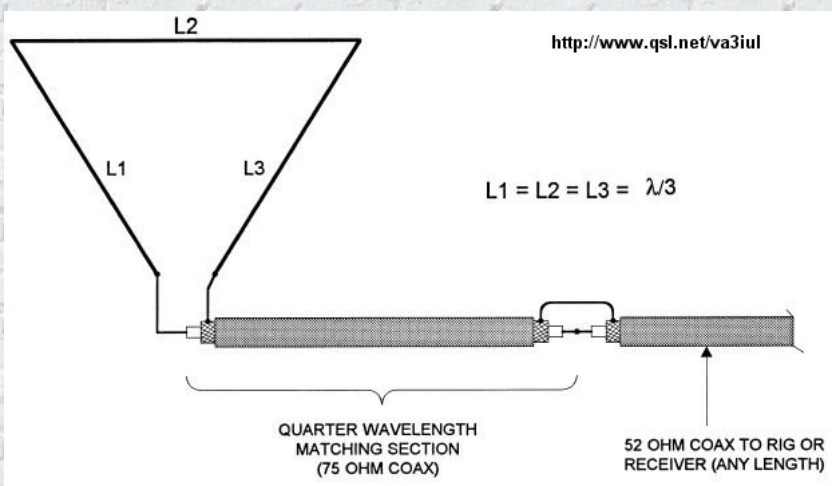

30 - Half Delta Loop Antenna

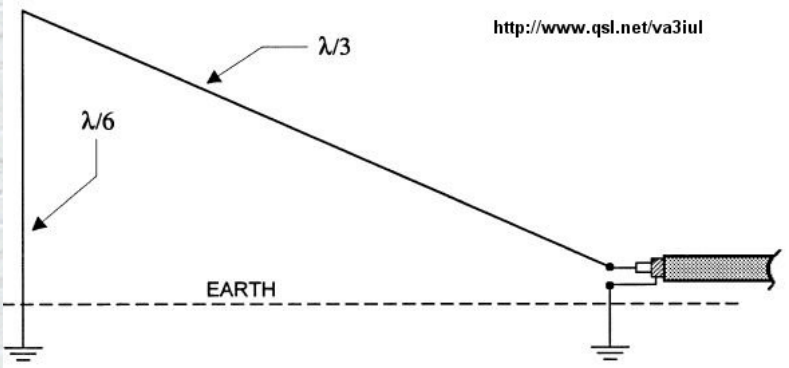

31 - Collinear Franklin Antenna

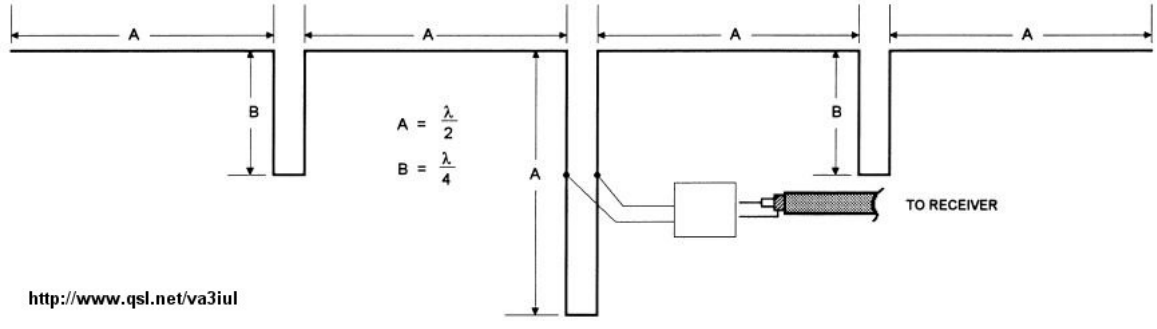

32 - Four Element Broadside Antenna

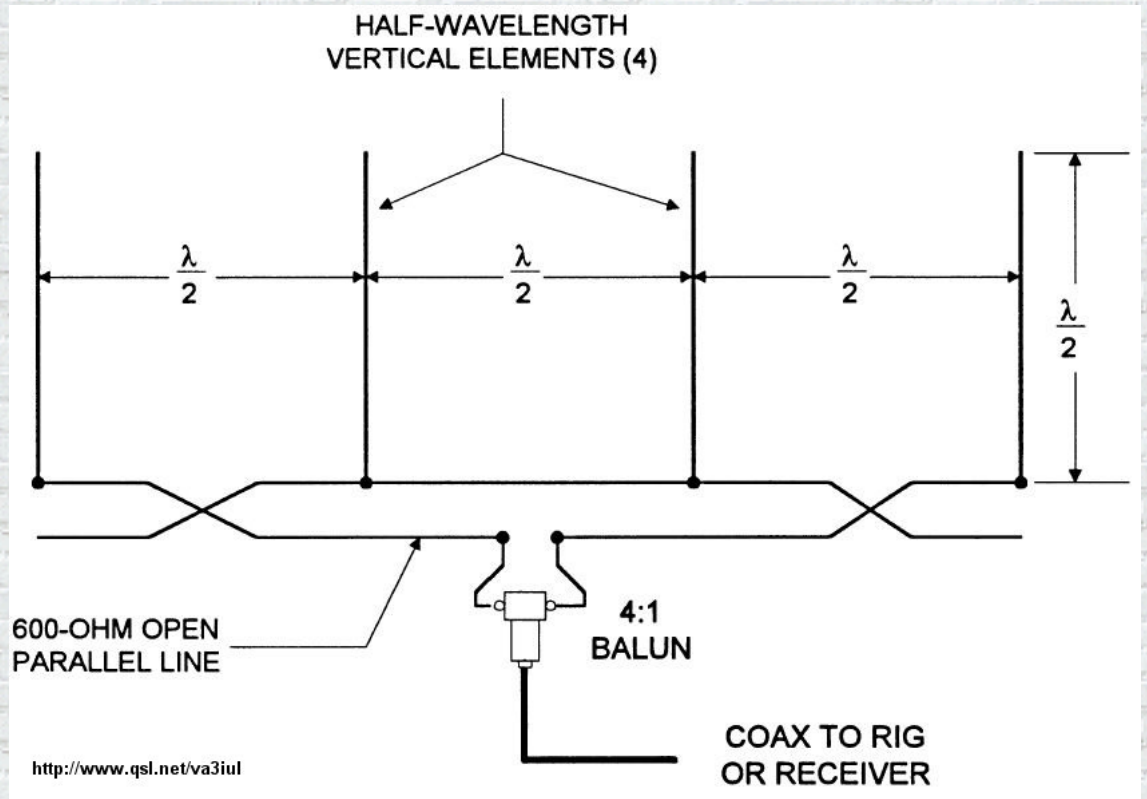

33 - The Lazy-H Array Antenna

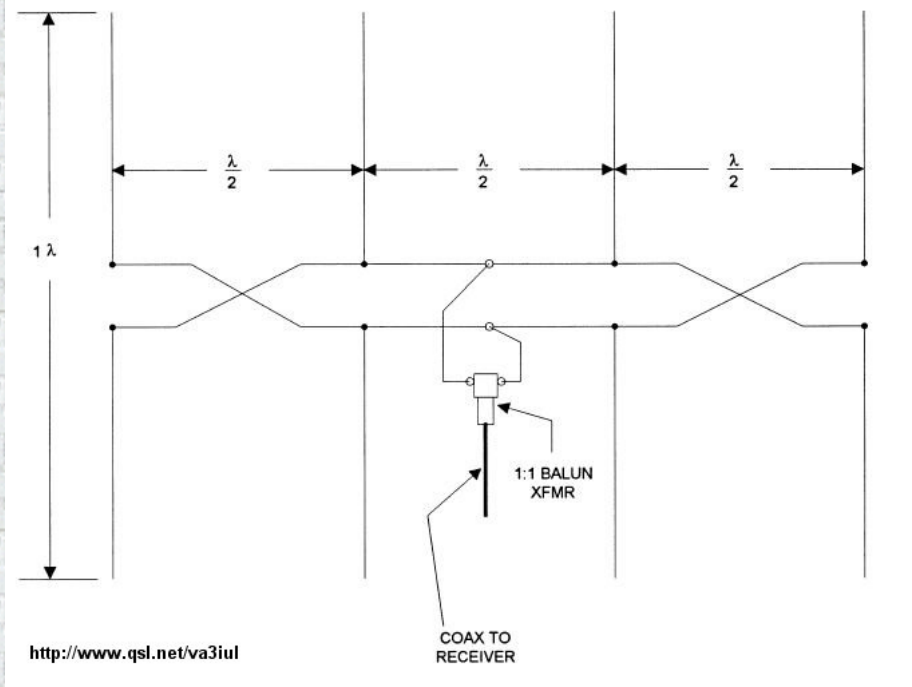

34 - Sterba Curtain Array Antenna

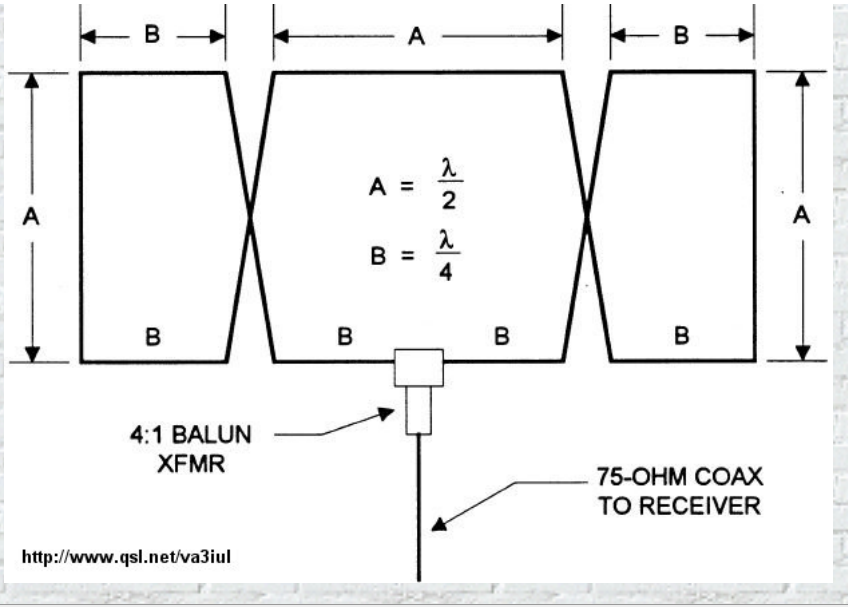

35 - T-L DX Antenna

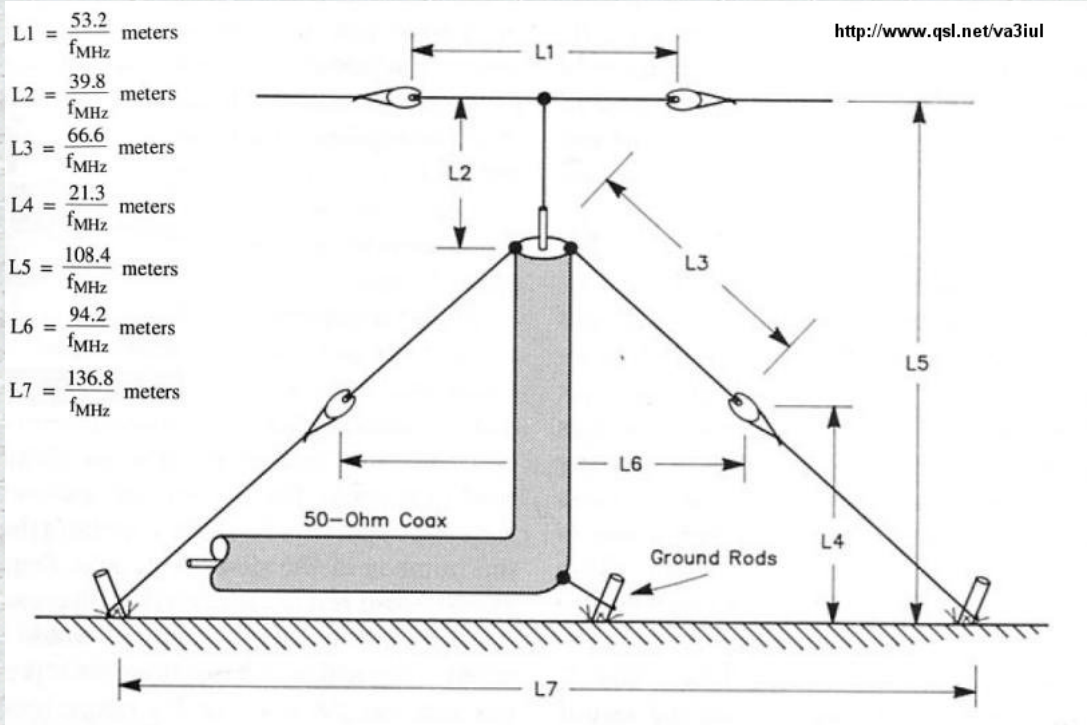

36 - 1.9 MHz Full-wave Loop Antenna

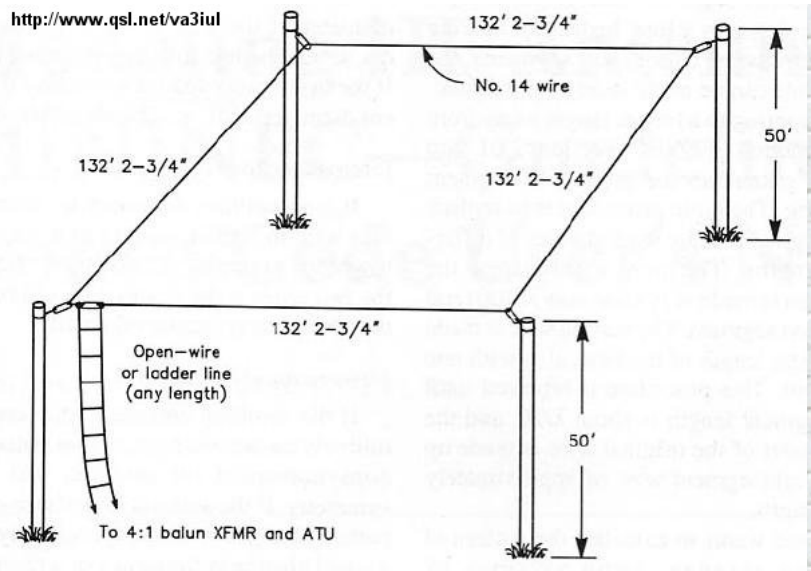

37 - Multi-Band Portable Antenna

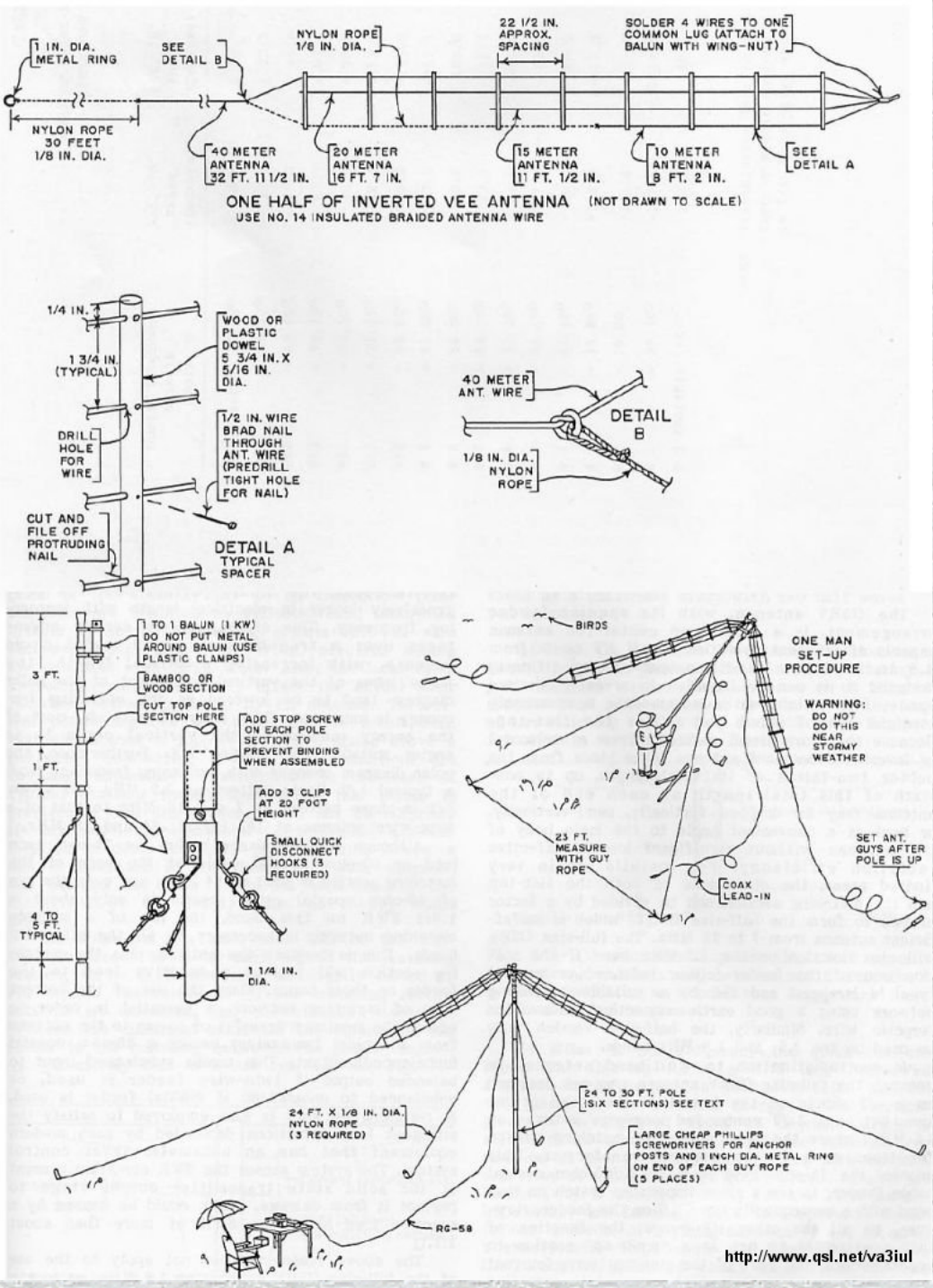

38 - Off-center-fed Full-wave Doublet Antenna

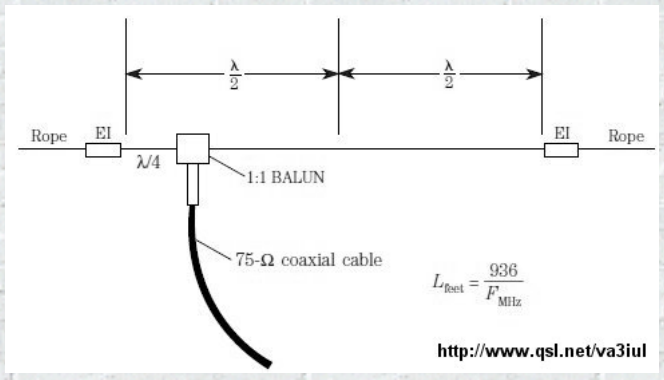

39 - Terminated Sloper Antenna

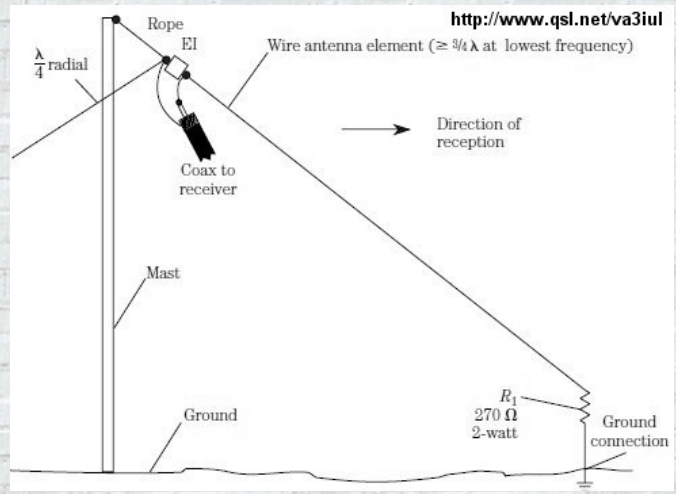

40 - Double Extended Zepp Antenna

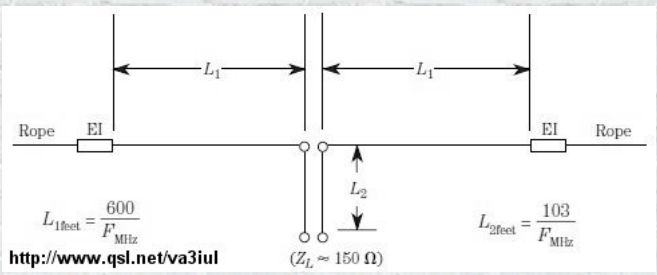

41 - TCFTFD Dipole Antenna

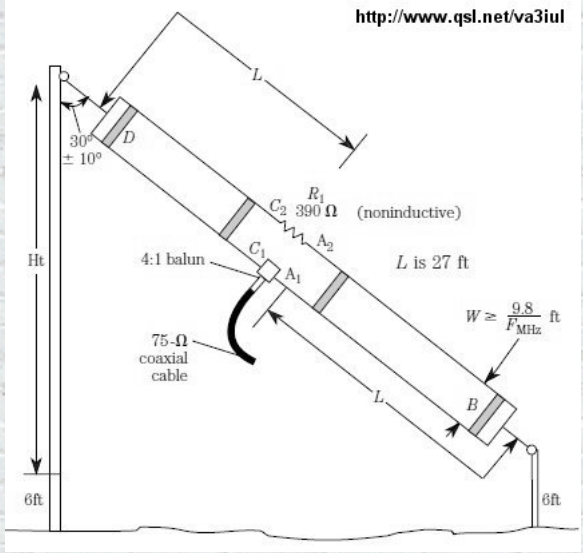

42 - Vee-Sloper Antenna

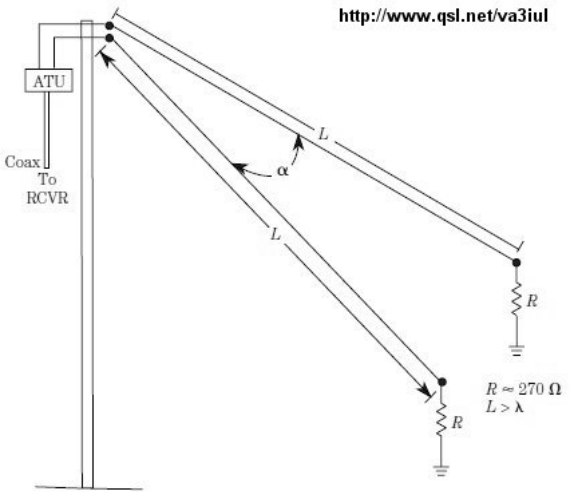

43 - Rhombic Inverted-Vee Antenna

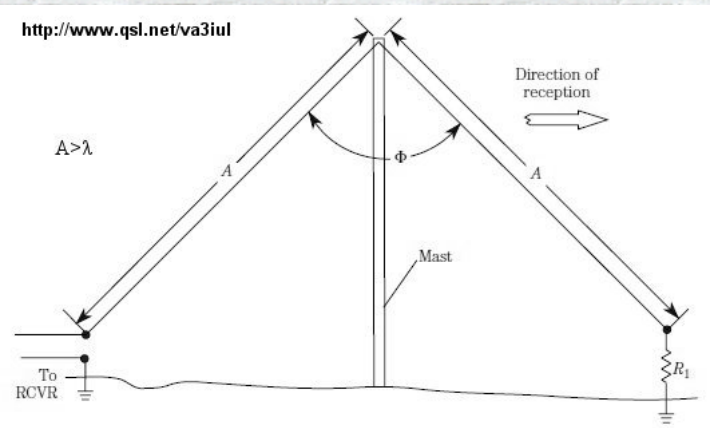

44 - Counterpoise Longwire

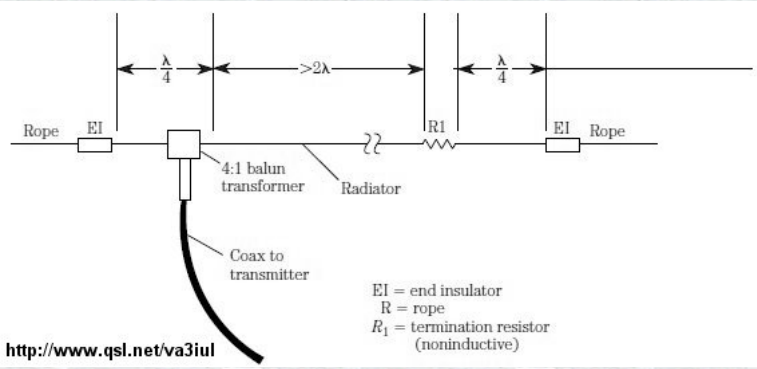

45 - Bisquare Loop Antenna

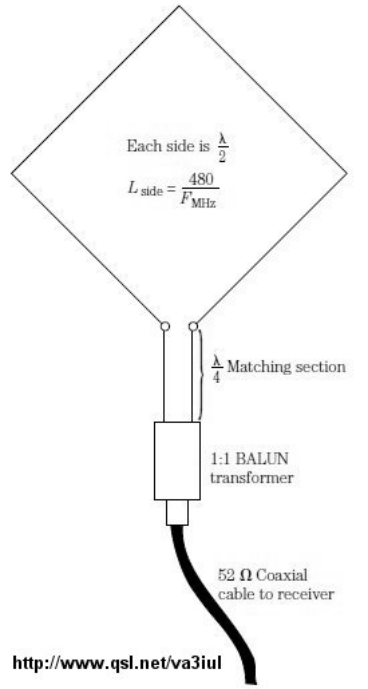

46 - Piggyback Antenna for 10m

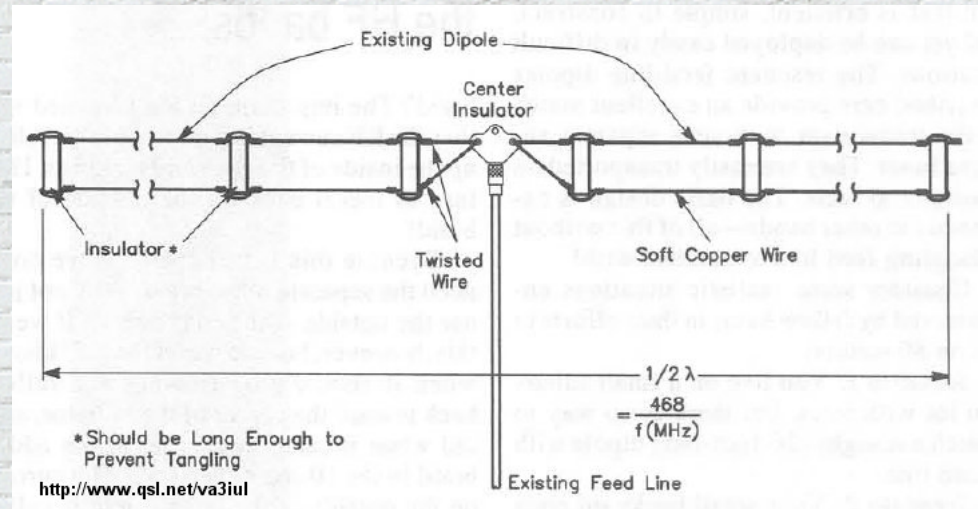

47 - Vertical Sleeve Antenna for 10m

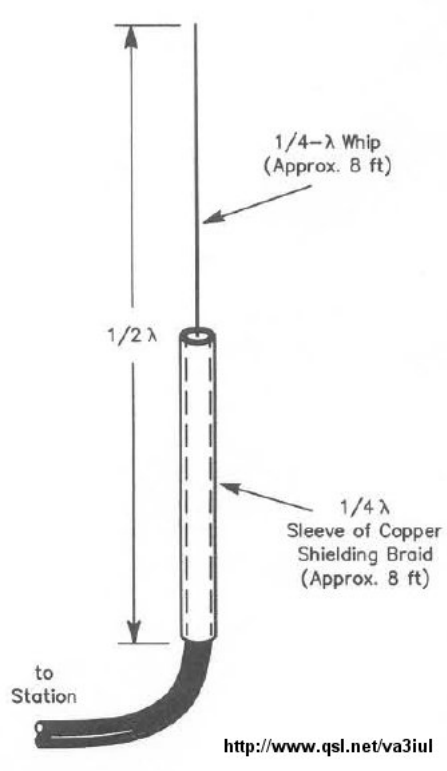

48 - Double Windom Antenna

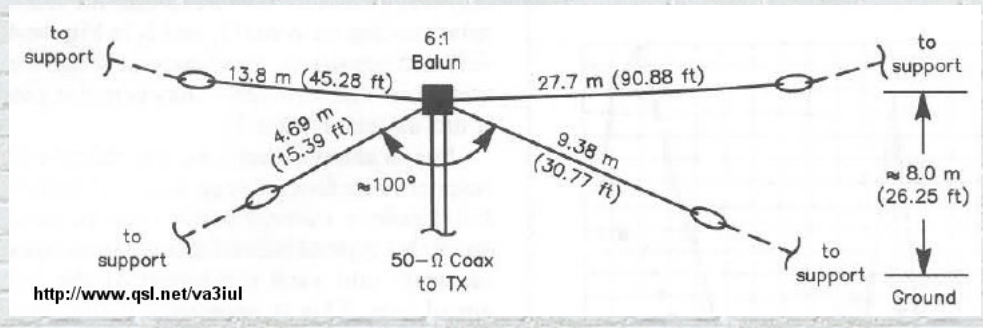

49 - Double Windom for 9 Bands

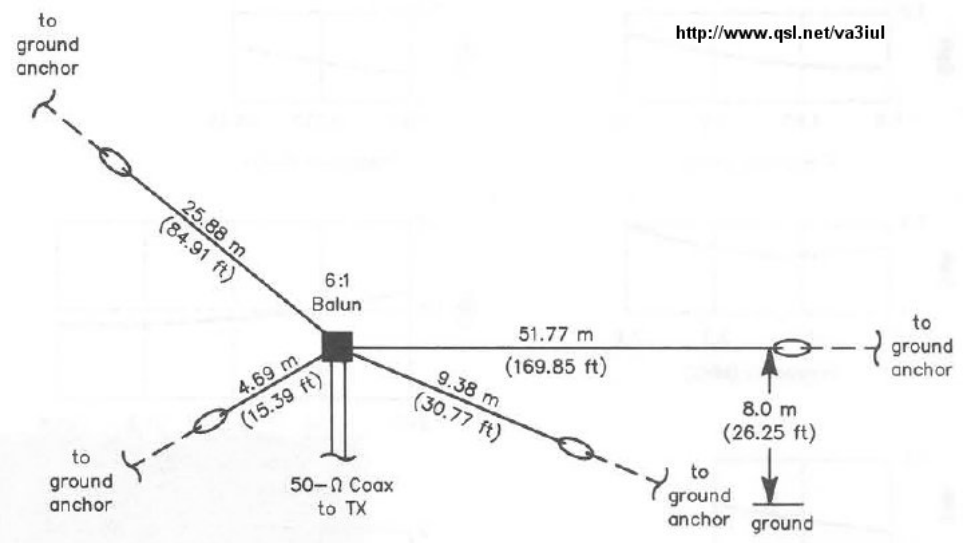

50 - Collinear Trap Antenna

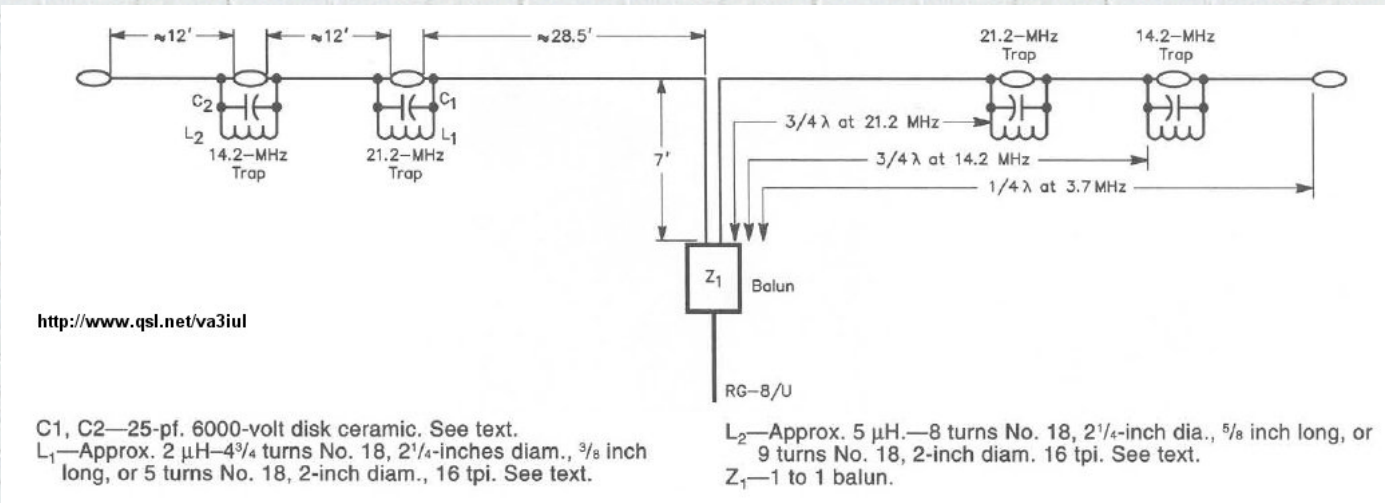

51 - Short Dipole Antenna for 40m - 80m - 160m

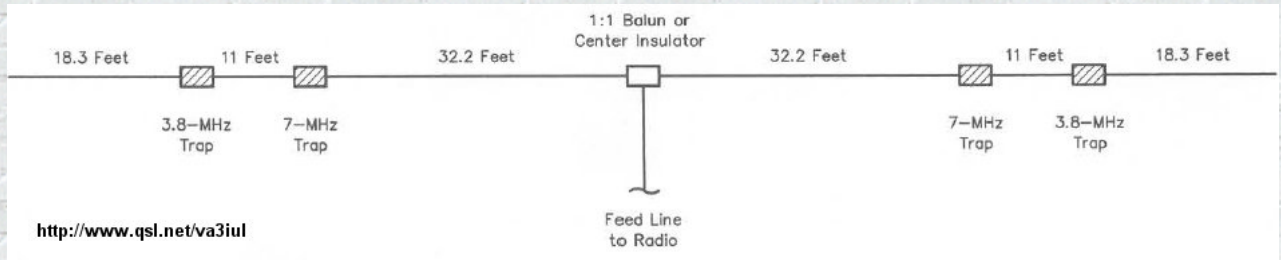

52 - Center Fed-Zepp Antenna for 80m - 40m

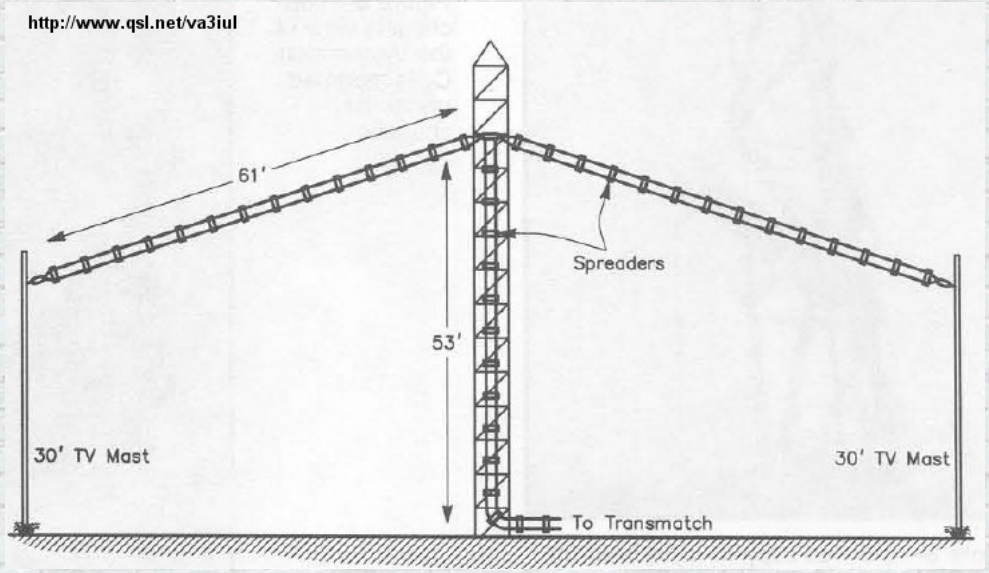

53 - All-Bands Antenna

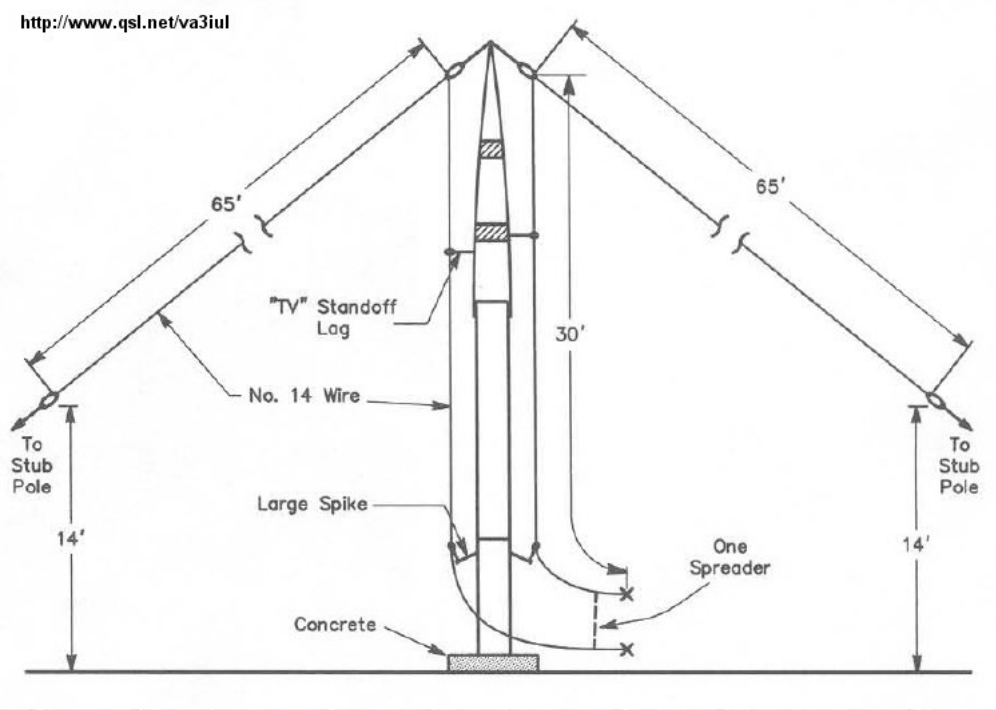

54 - All-Bands Dipole Antenna

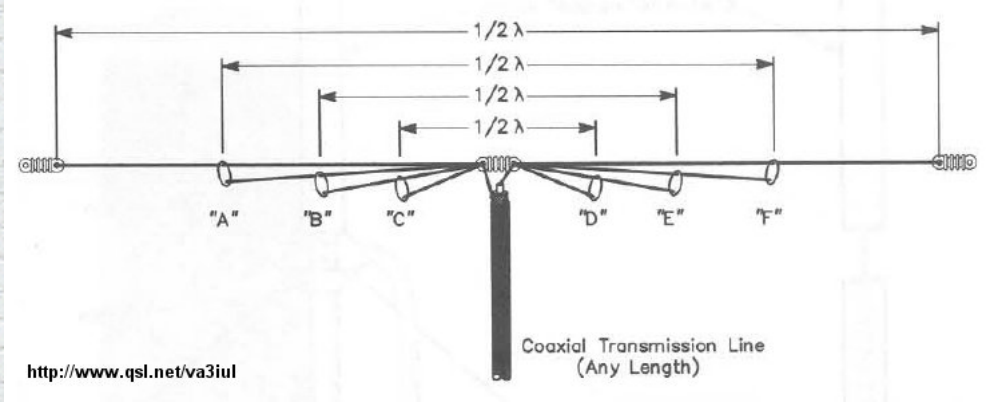

55 - Multiband Z Antenna

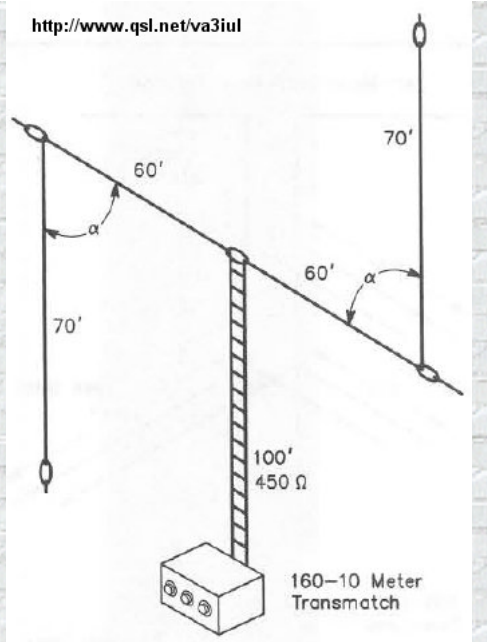

56 - Multiband Dipole Antenna

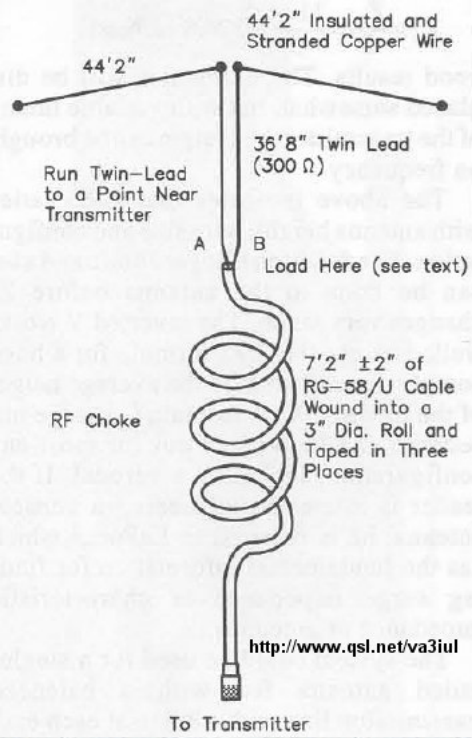

57 - Five-Bands No-Tuner Antenna

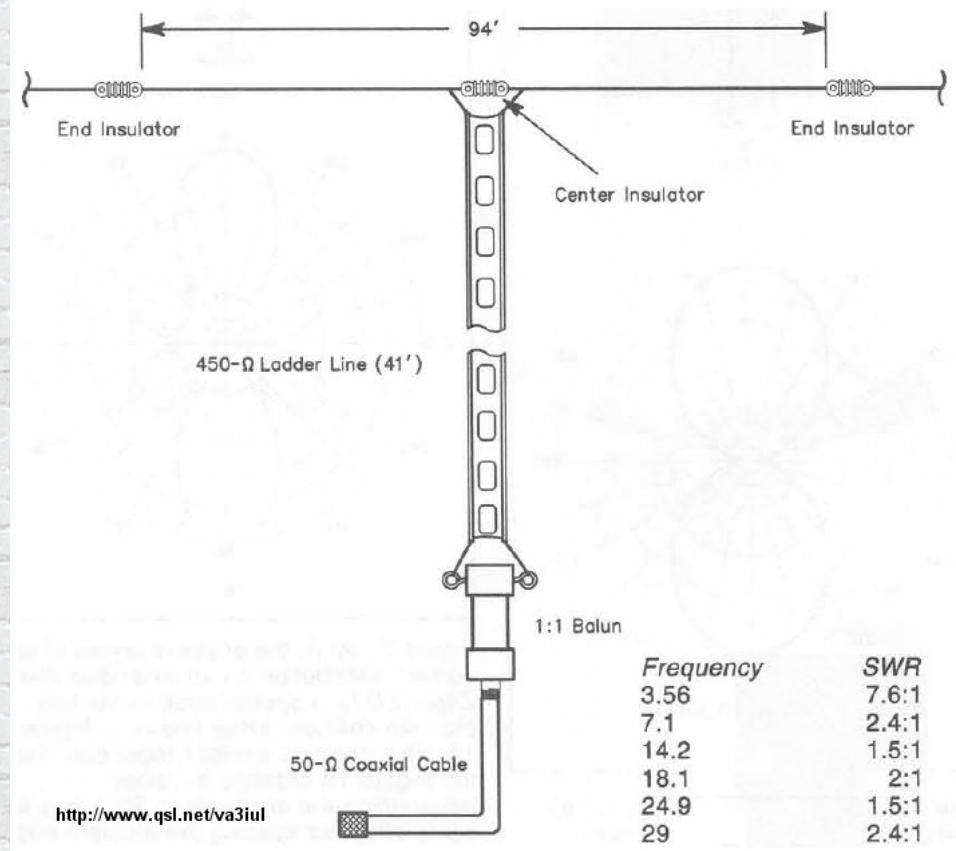

58 - Dualband Full-wave Loop Antenna for 80m-40m

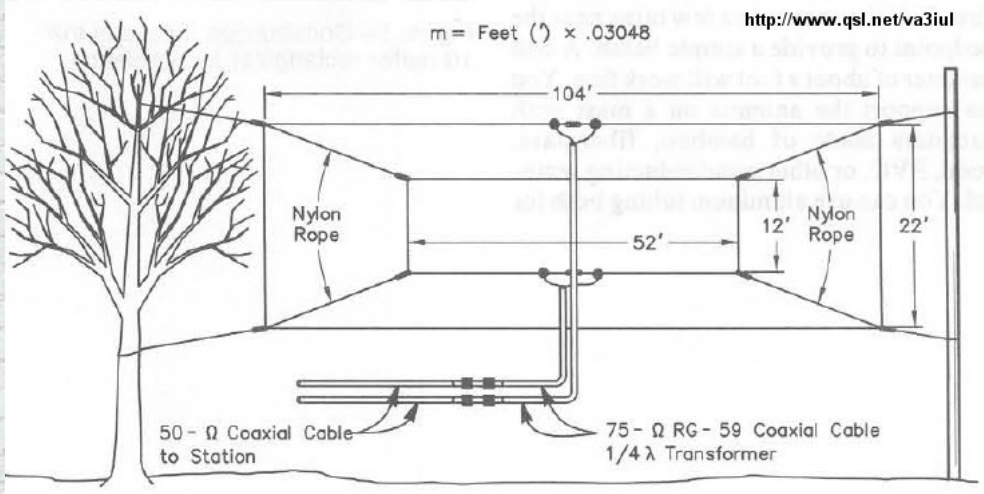

59 - Loop Antenna for 10m

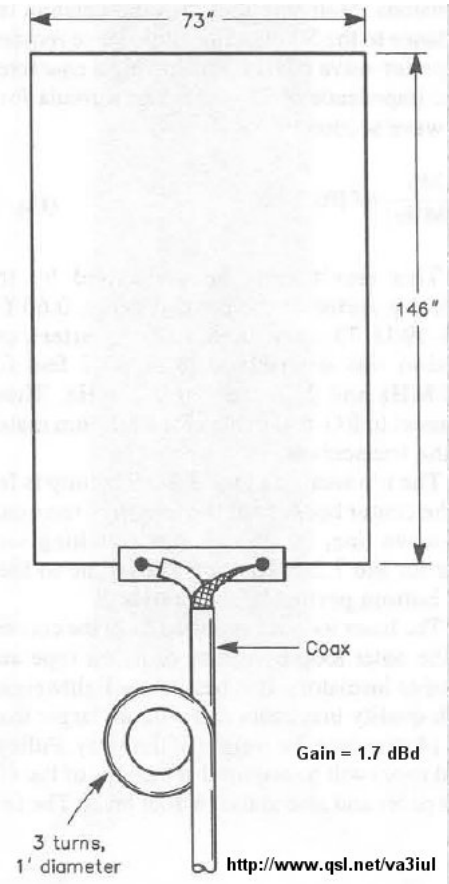

60 - Lazy Quad Antenna for 10m

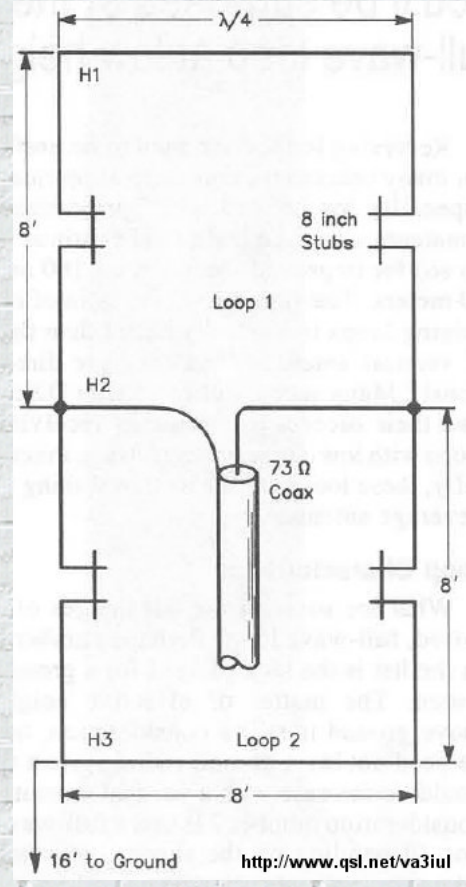

61 - Tri-band Delta Loop Antenna for 80m - 40m - 30m

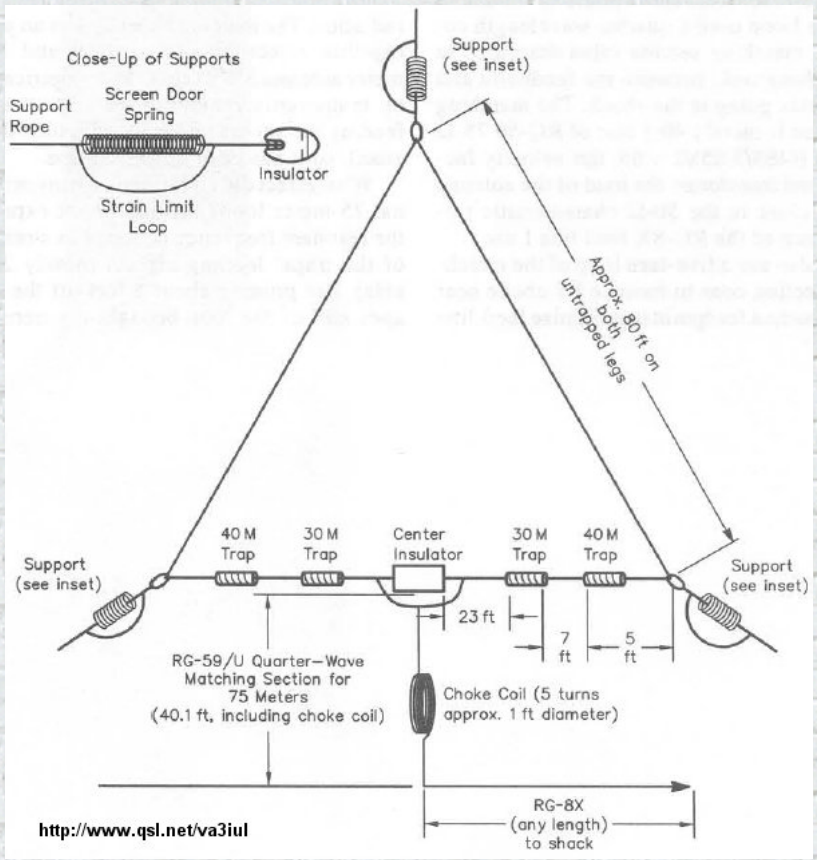

62 - Dual-band Loop Antenna for 30m - 40m

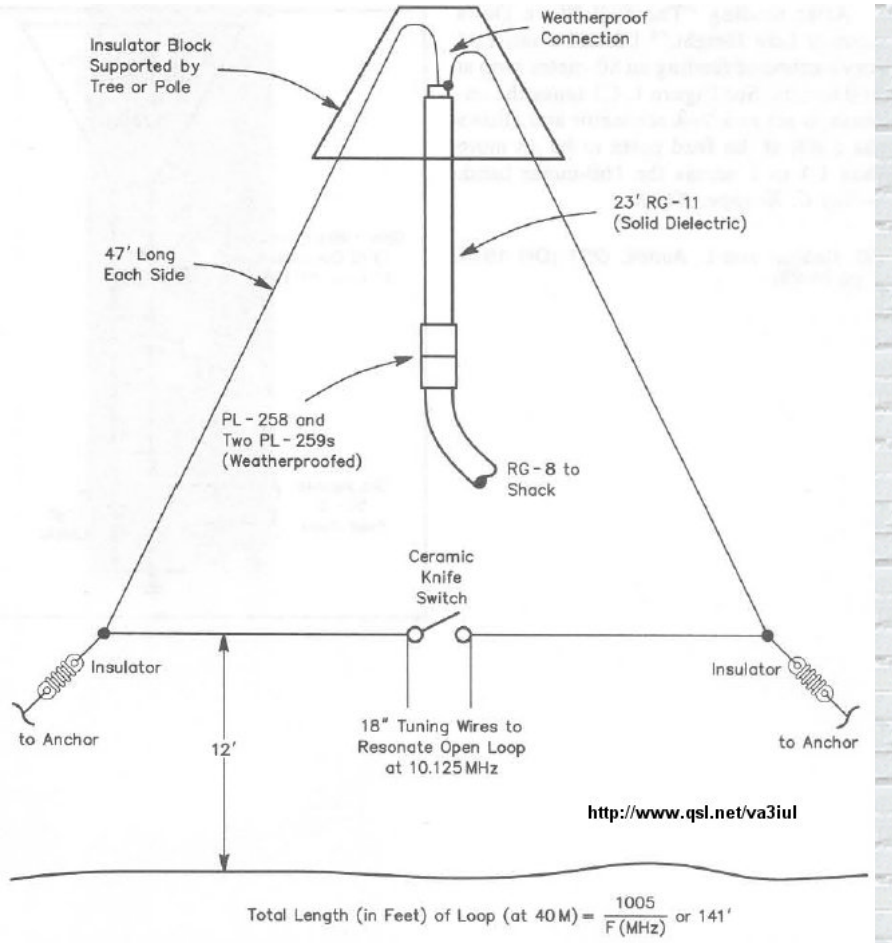

63 - Wire-Beam Antenna for 80m

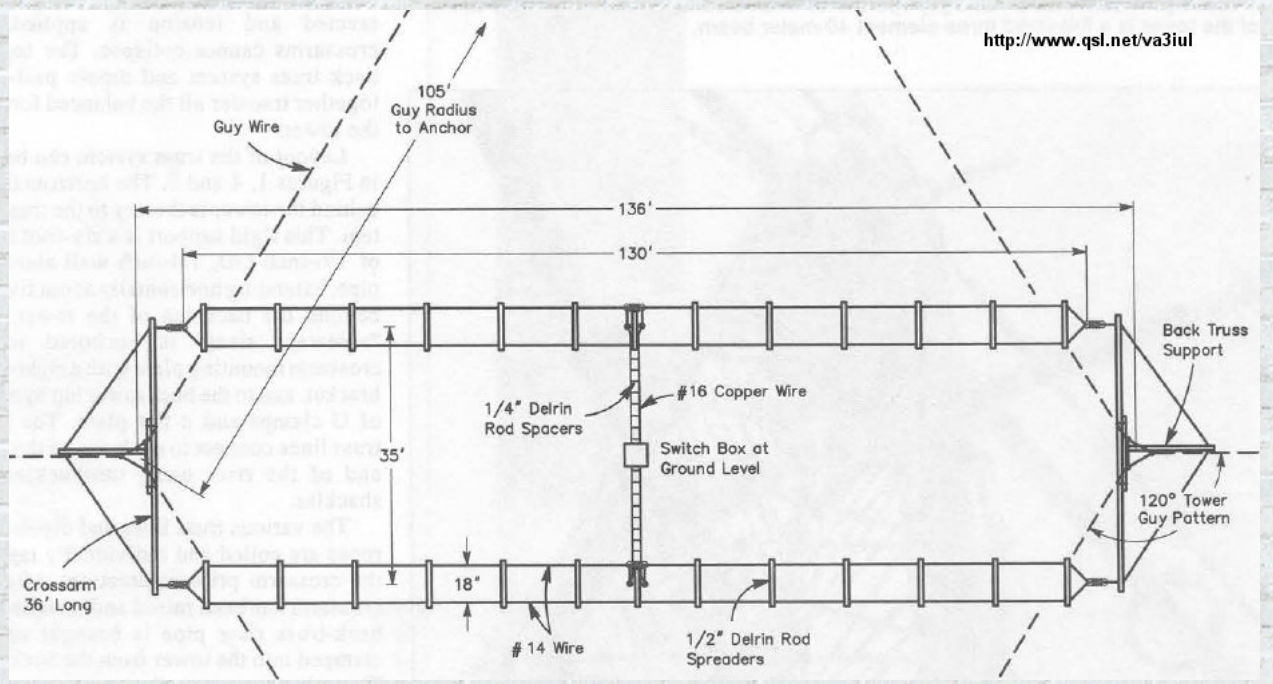

64 - Dual-Band Sloper Antenna

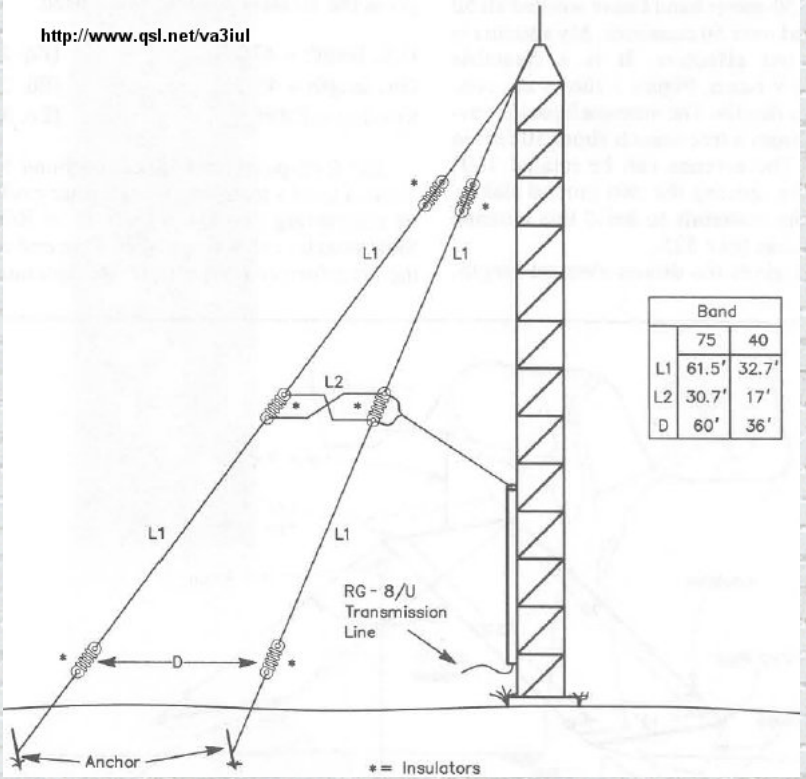

	Band	
	75	40
L1	61.5'	32.7'
L2	30.7'	17'
D	60'	36'

65 - Inverted-V Beam Antenna for 30m

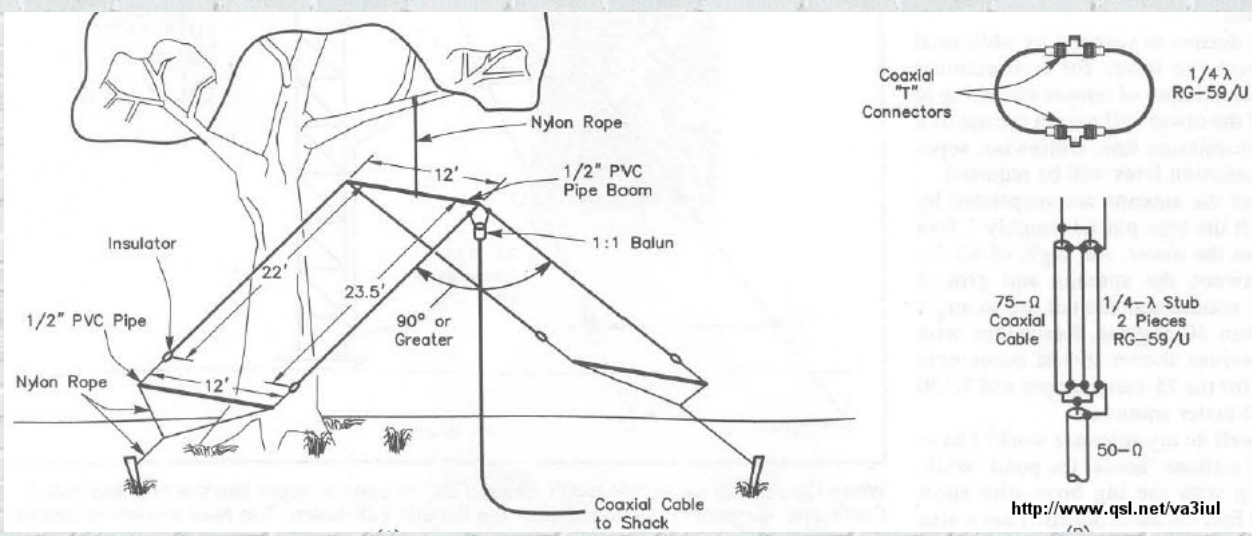

66 - ZL-Special Beam Antenna for 15m

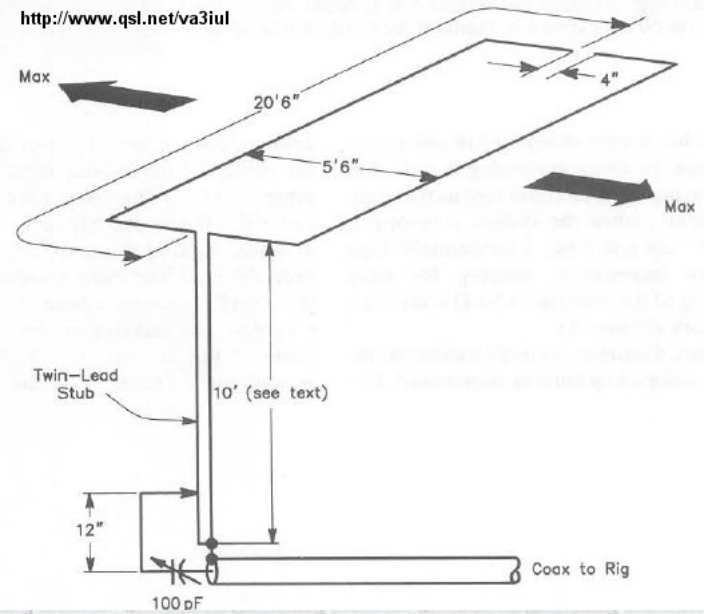

67 - Half-Sloper Antenna for 160m

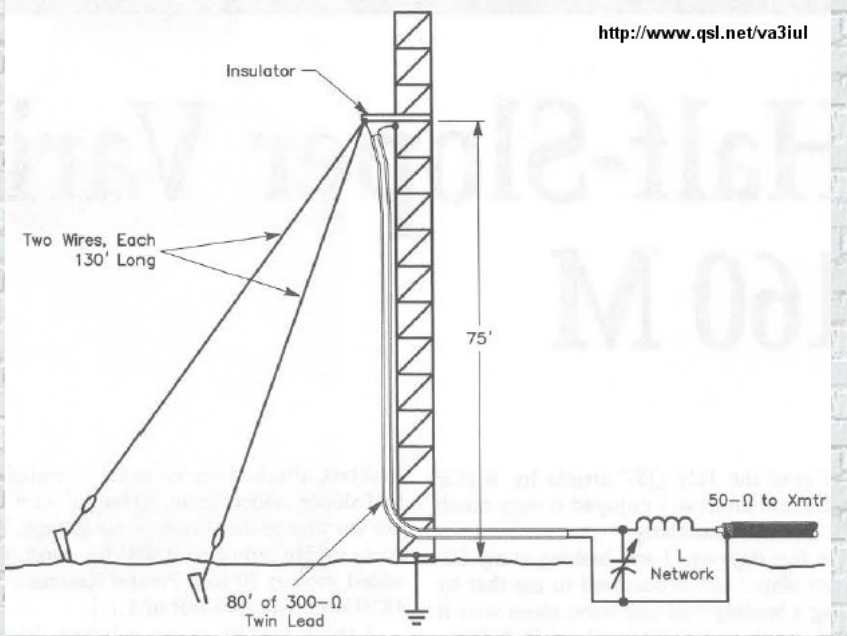

68 - Two-Bands Half Sloper for 80m - 40m

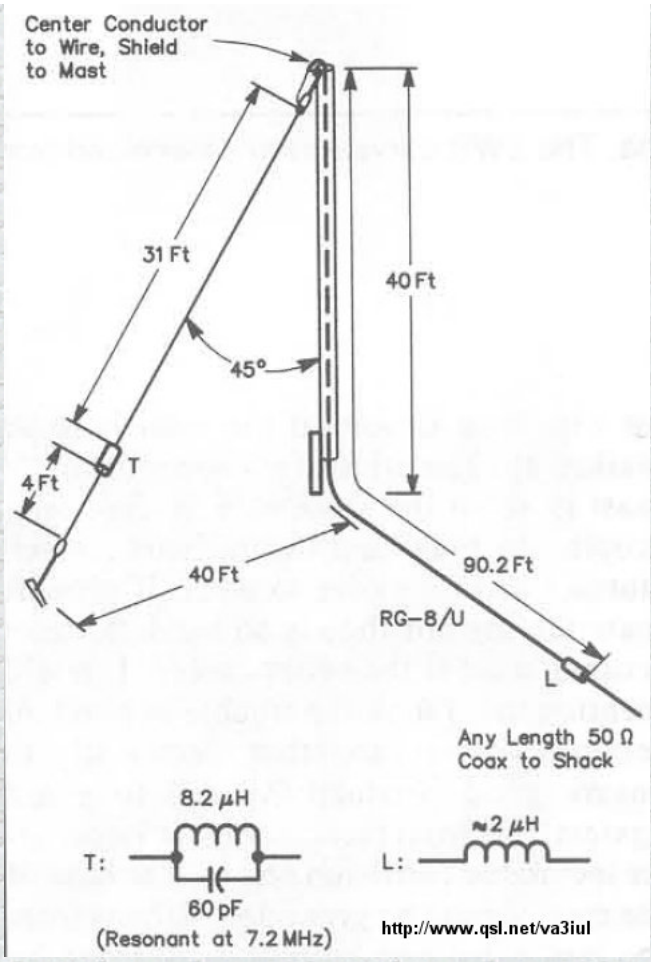

69 - Linear Loaded Sloper Antenna for 160m

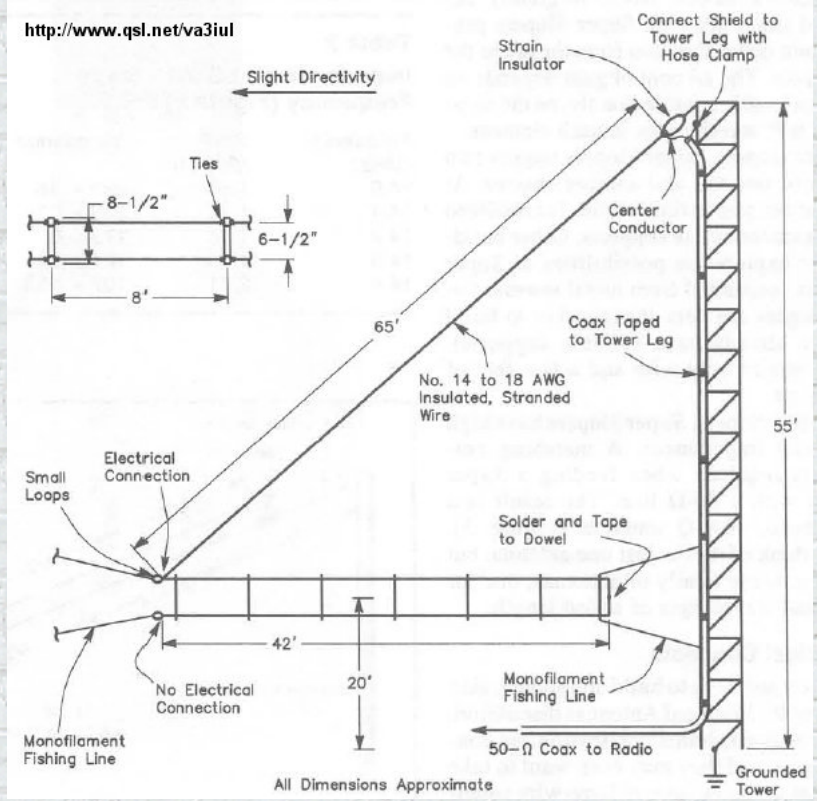

70 - Super-Sloper Antenna

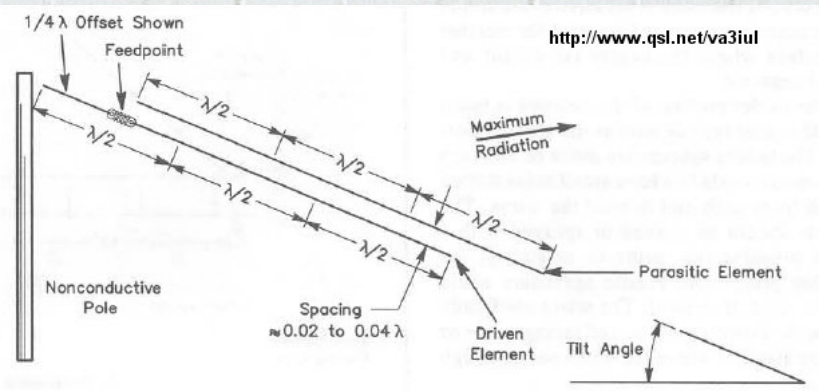

71 - Tower Pole as a Vertical Antenna for 80m

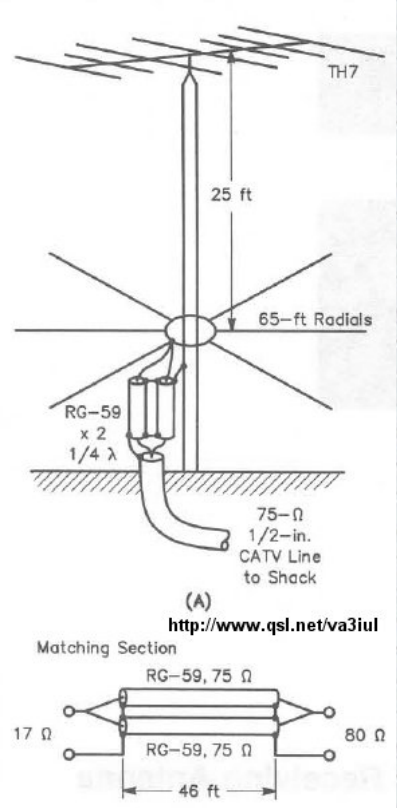

72 - Clothesline Antenna

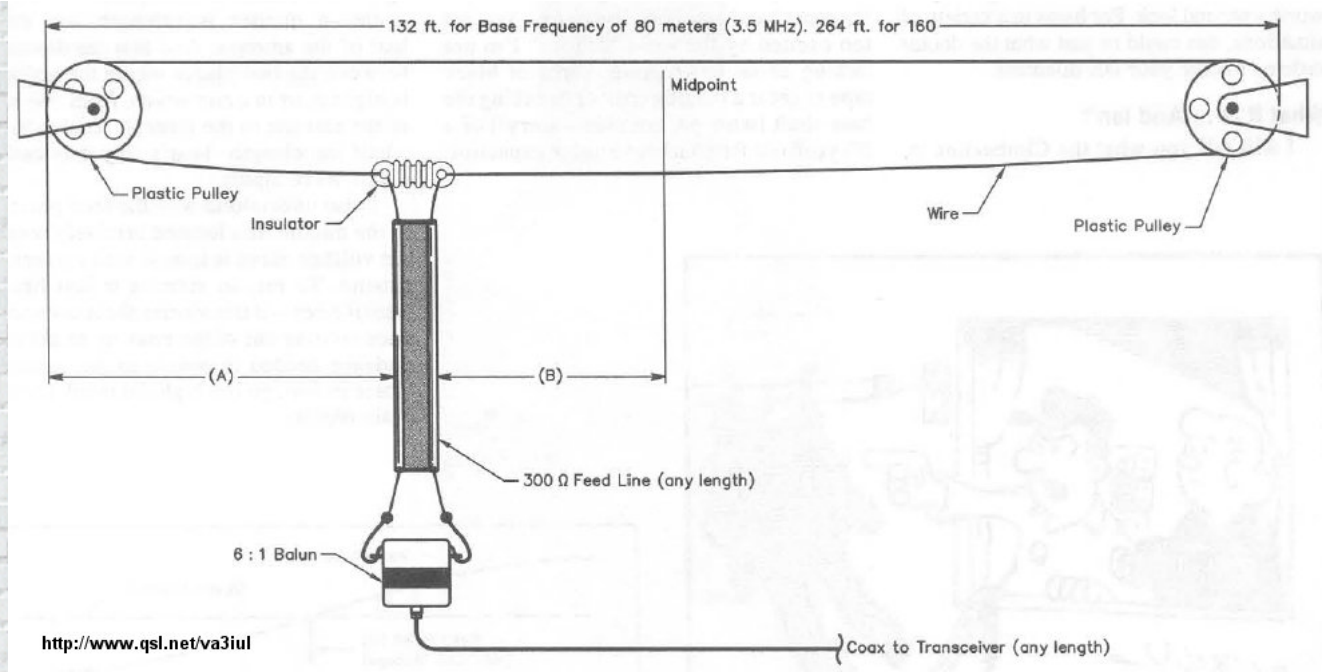

73 - Curtain Zepp Antenna for 160m, 80m, 40m

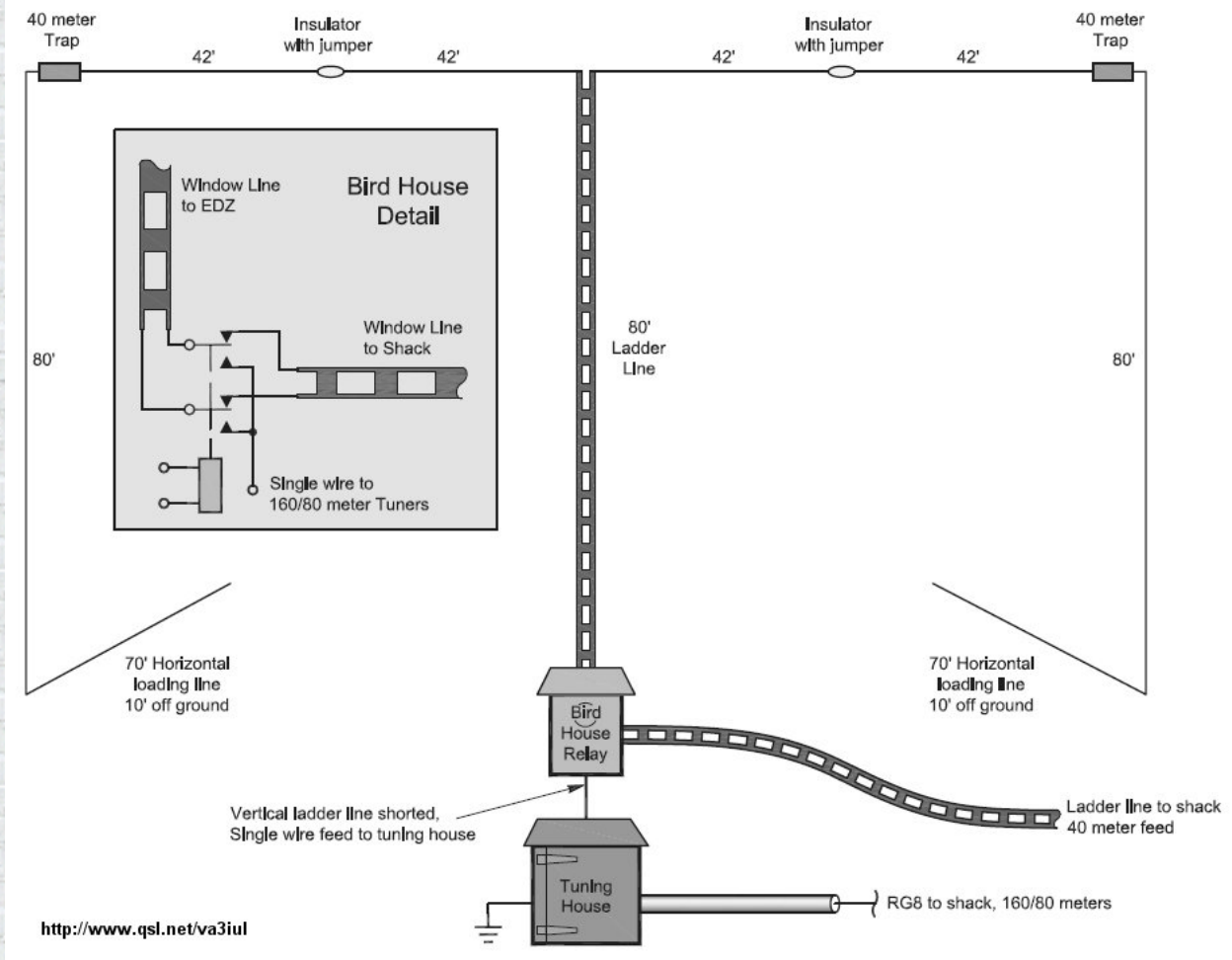

74 - Collinear Array Antenna for 40m, 30m, 20m

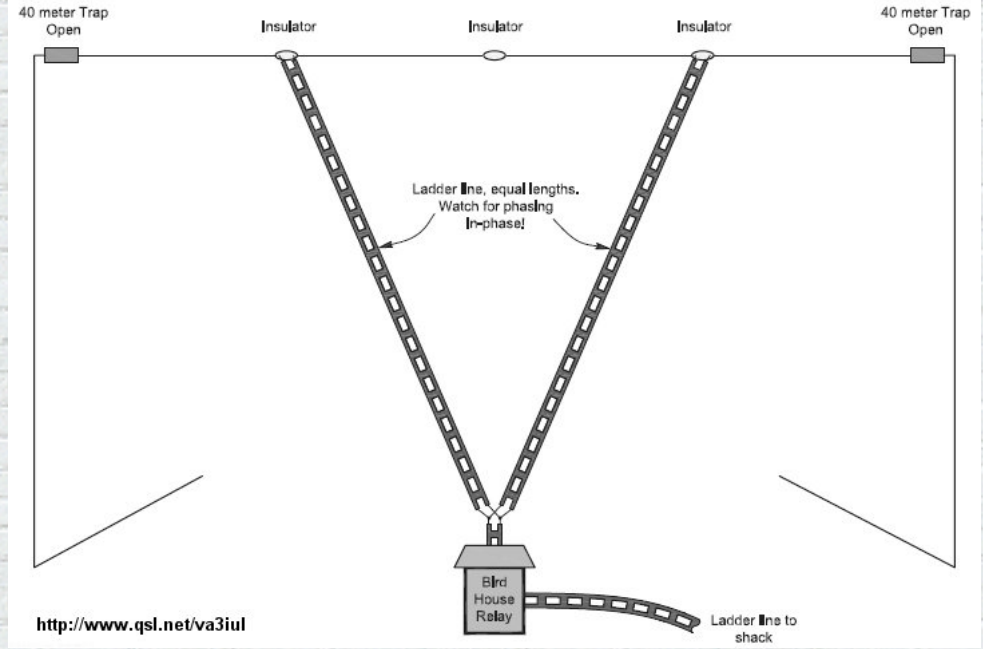

75 - 160m Inverted Delta Loop

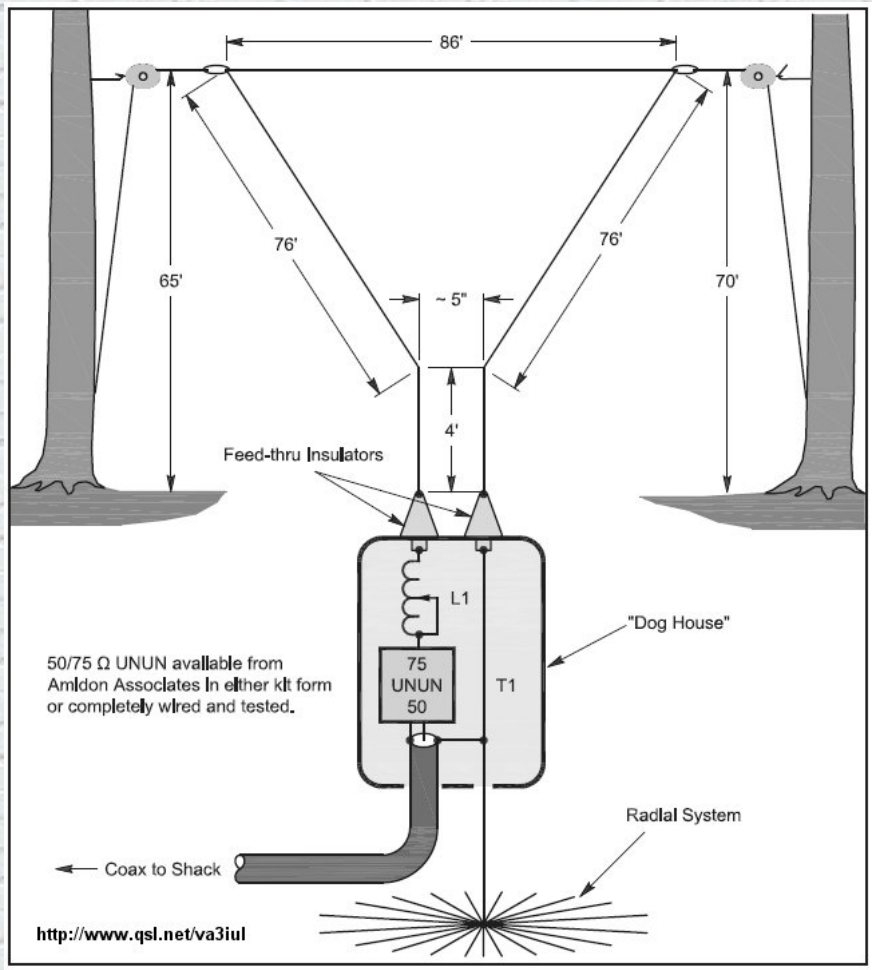

76 - Half Rhombic Unidirectional Vertical for 20m to 6m

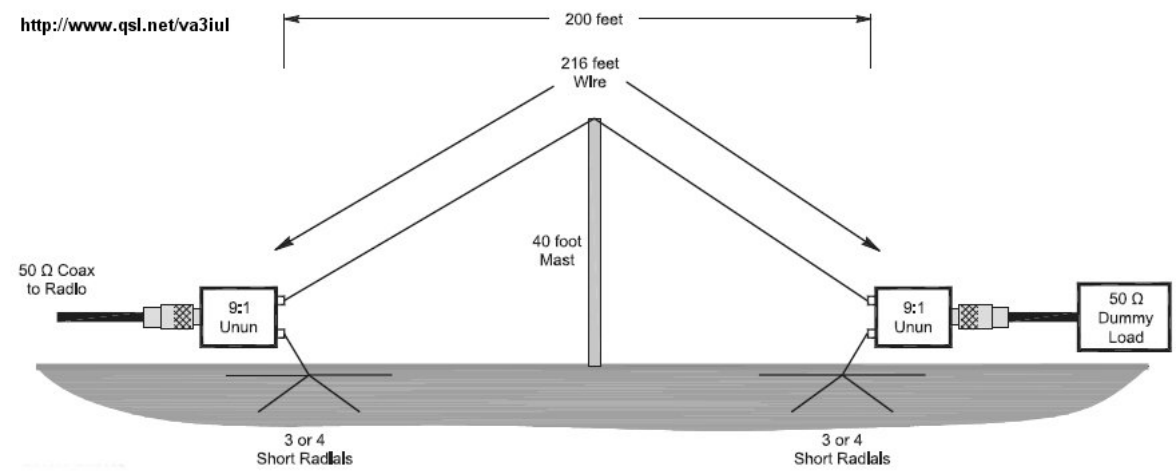

77 - Capacitance Loaded Vertical Antenna for 160m

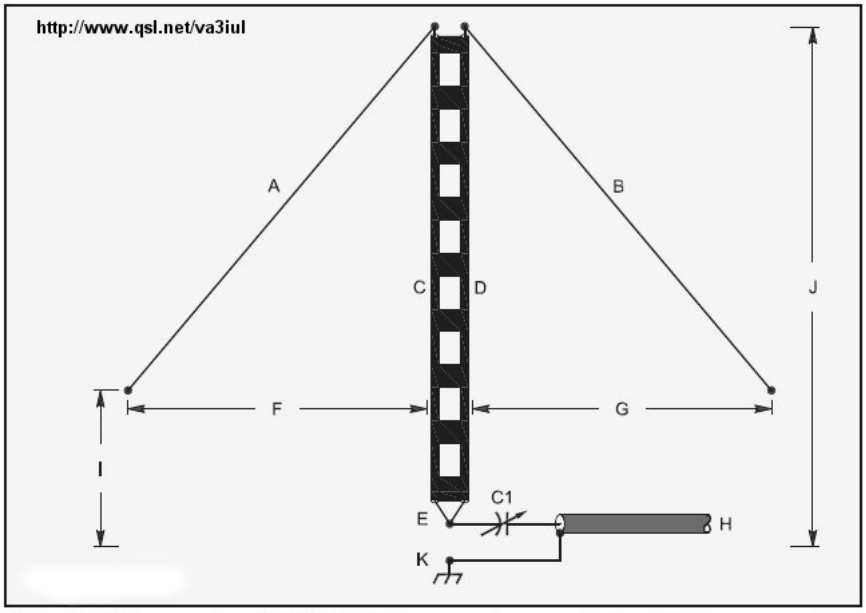

C1 — Variable capacitor, 0-1500 pF, 7 kV.
A, B — Sloping segments of 66 foot, 4 inch pieces of #16 AWG enameled copper wire soldered to the top of segments C and D and forming a 45° angle.
C, D — 59 feet of 450 Ω open wire or window line or, alternatively, two parallel lengths of #16 AWG enameled copper wire with a 1 inch separation.
E — 1 inch triangle formed by the bottom ends of the open wire line. Solder them tightly at the vertex and connect to C1.
F, G — Distance between the lower ends of segments A and B from segments C and D, 51 feet.
H — Any length of 50 Ω coaxial cable (RG-213 in this case). The central conductor must be soldered to C1, and the braid to the ground radials.
I — Approximately 16 feet from ground to lower ends of sloping segments A and B.
J — 60 feet from antenna top to bottom.
K — Ground radials, 60 ¼ λ (the more the better — 32 will form a reasonable ground).

78 - Fan Dipole Antenna for 80m to 6m

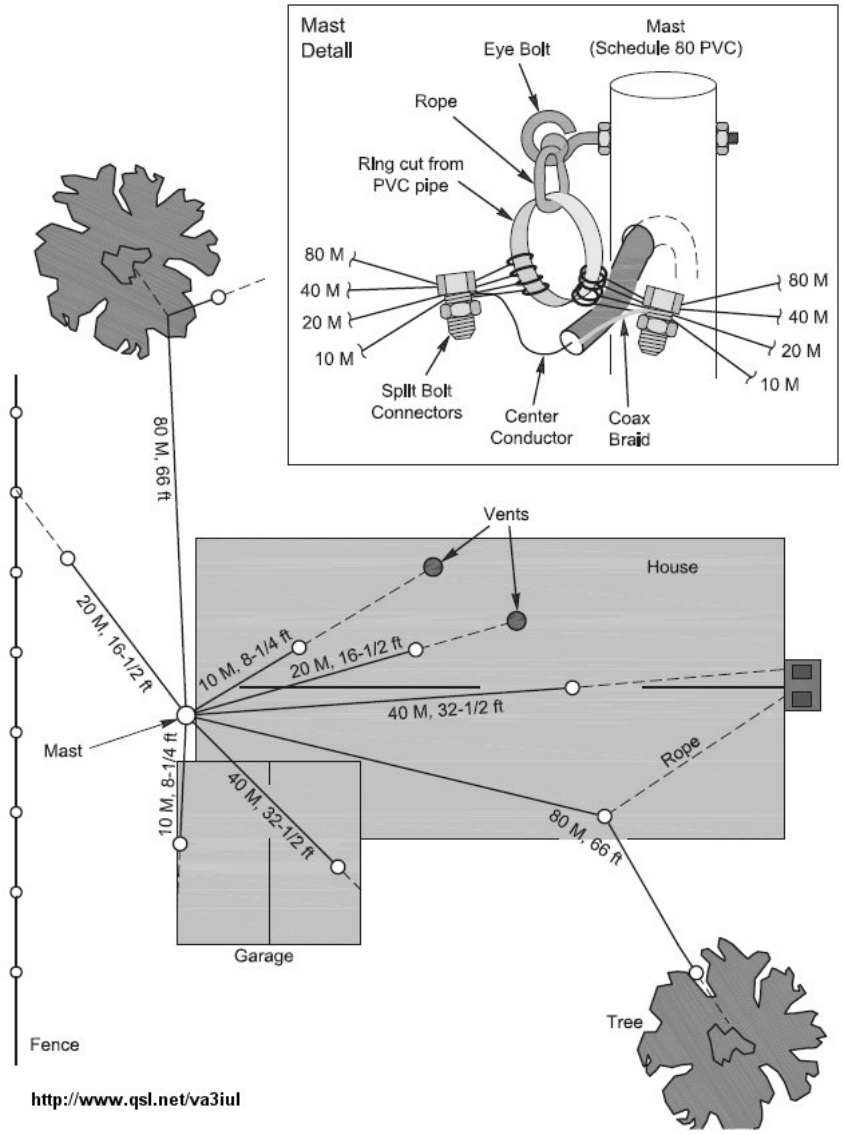

79 - Wire Ground Plane Antenna

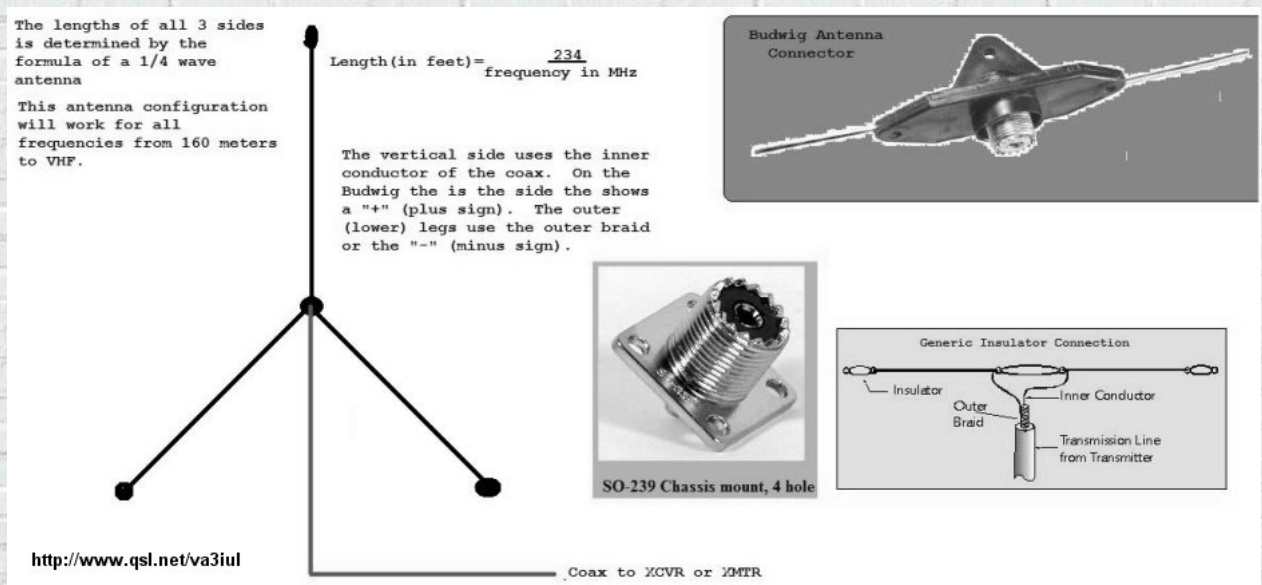

80 - Inverted Delta Loop Antenna for 160m

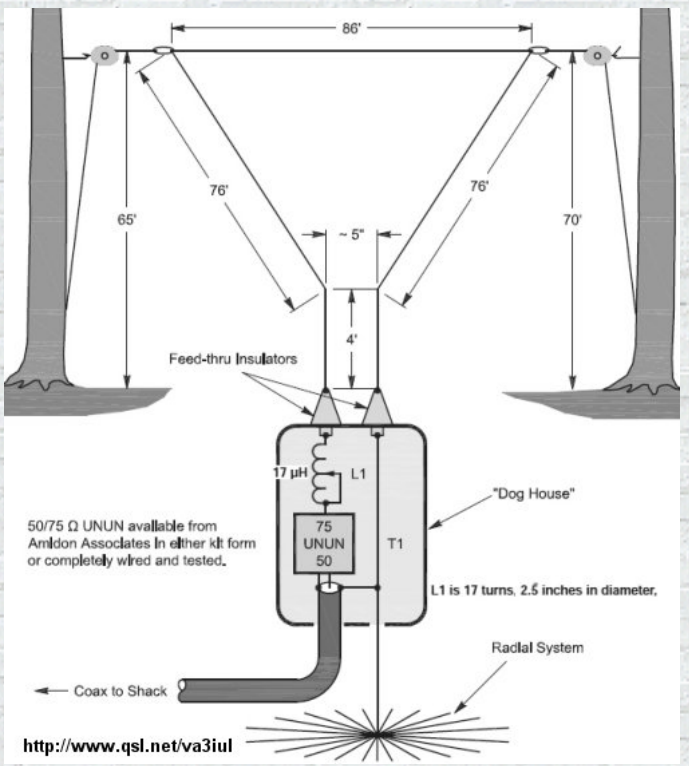

81 - Inverted-L for 160m

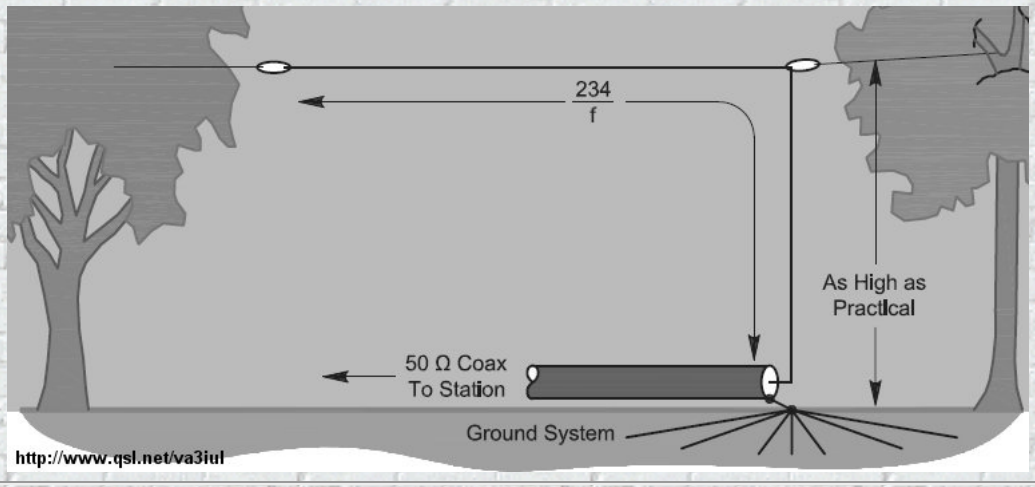

82 - 300ohm-Ribbon Dual Band Dipole

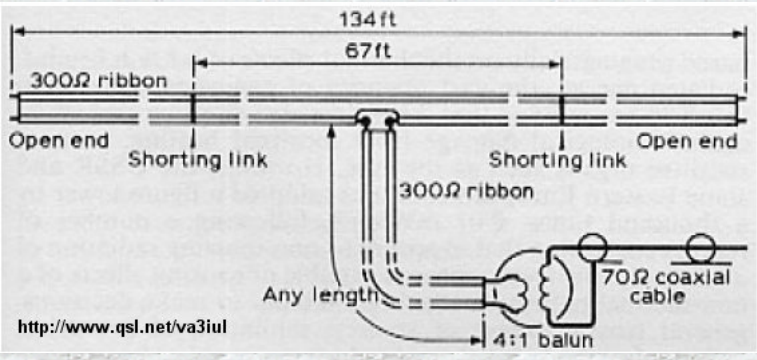

83 - Tri-Band Beam for 20m, 15m, 10m

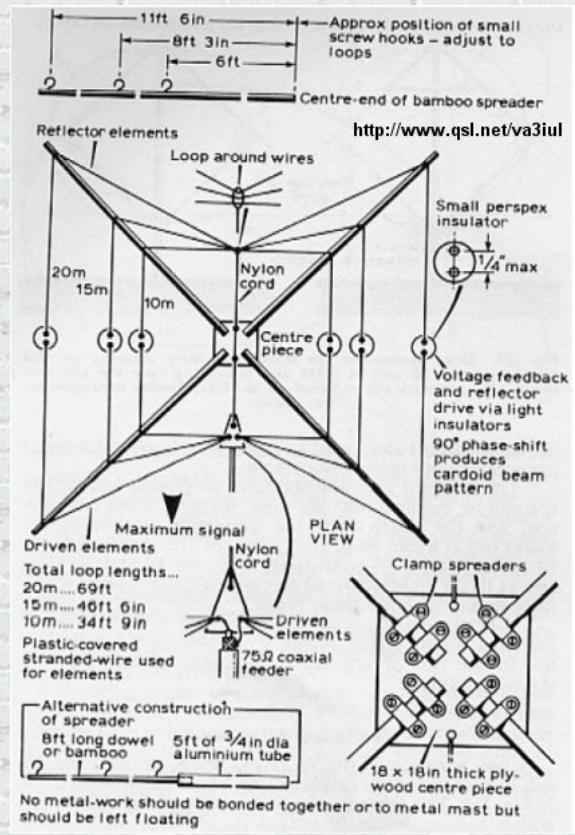

84 - Mini-Horse Yagi Antenna

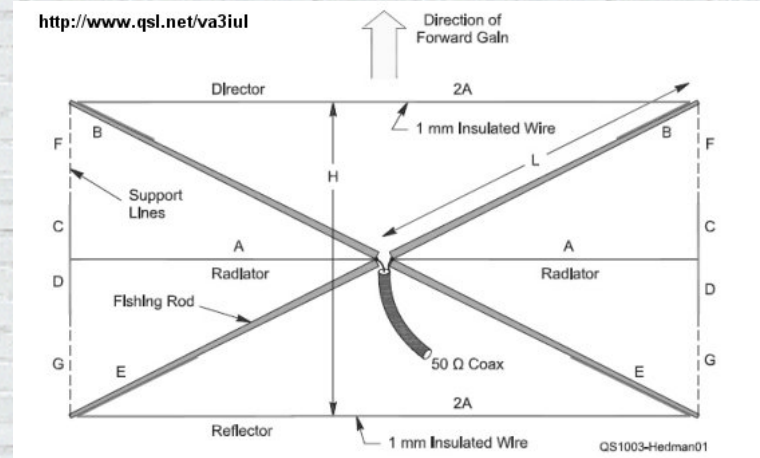

MHz	A	B	C	D	E	F	G	H	L
144	1' 2.2"	0' 4.7"	0' 3.5"	0' 1.8"	0' 7.1"	0' 4.7"	0' 6.5"	1' 4.5"	1' 4.3"
28	5' 11.6"	1' 10.8"	1' 6.9"	0' 9.4"	2' 11.8"	1' 10.8"	2' 8.3"	6' 11.4"	6' 11.0"
21	7' 11.6"	2' 6.3"	2' 1.2"	1' 0.6"	3' 11.6"	2' 6.3"	3' 6.9"	9' 3.0"	9' 2.6"
14	11' 11.3"	3' 9.7"	3' 1.8"	1' 6.9"	5' 11.2"	3' 9.7"	5' 4.6"	13' 10.9"	13' 9.7"
7.1	23' 10.5"	7' 7.3"	6' 3.6"	3' 1.8"	11' 10.5"	7' 7.3"	10' 9.1"	27' 9.8"	27' 7.4"

85 - Half-Rhombic Directive Antenna for 20m to 6m

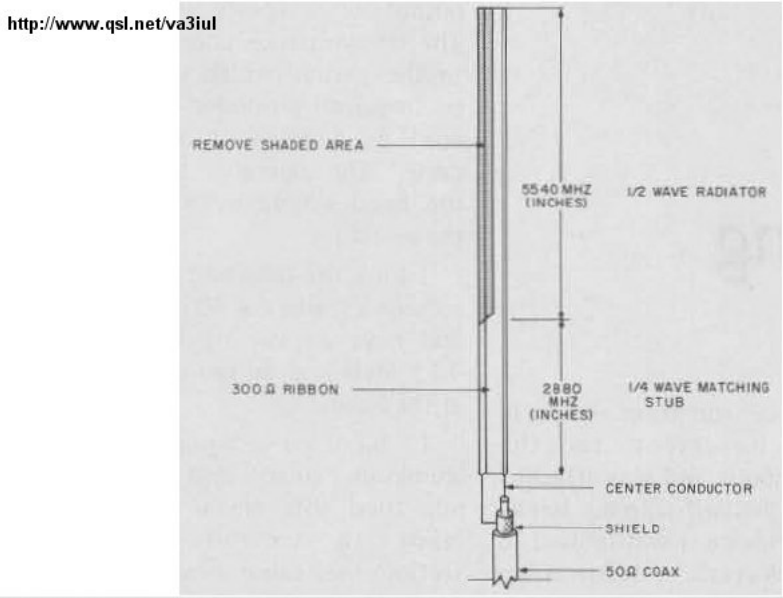

Frequency (MHz)	28.0	28.5	29.0	50.0	51.0	52.0	144	145	146	147
Radiator (inches)										
½ wave	197.8	194.3	191.0	110.8	108.6	106.5	38.4	38.2	37.9	37.7
Stub (inches)										
¼ wave	102.8	101.0	99.3	57.6	56.4	55.3	20.0	19.8	19.7	19.6

86 - Fan-Dipole Antenna for 80m, 40m, 20m

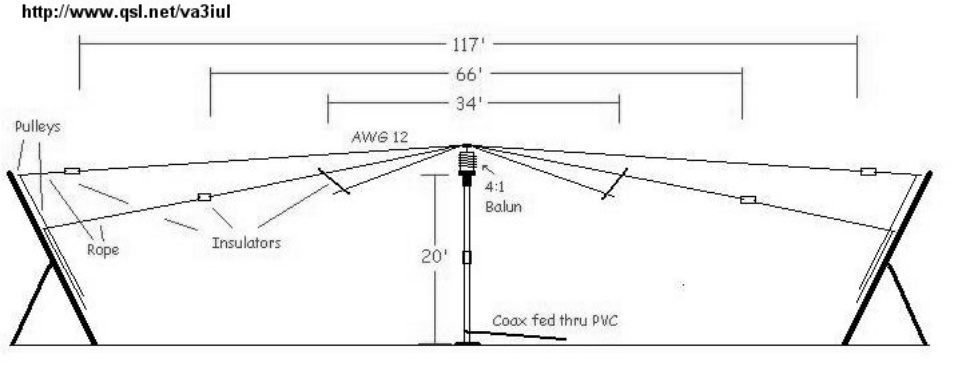

87 - Capacity Tuned Folded Loop Antenna for 20m

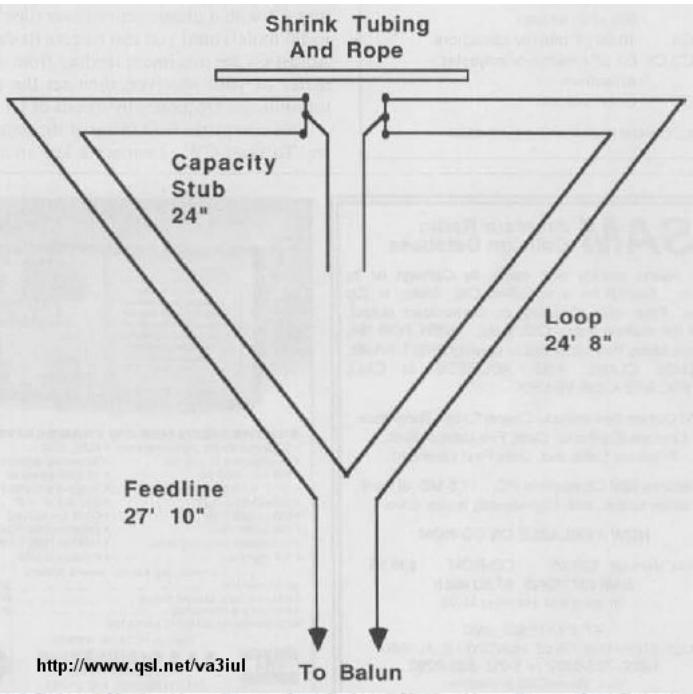

88 - Indoor Loop Antenna for 80m to 30m

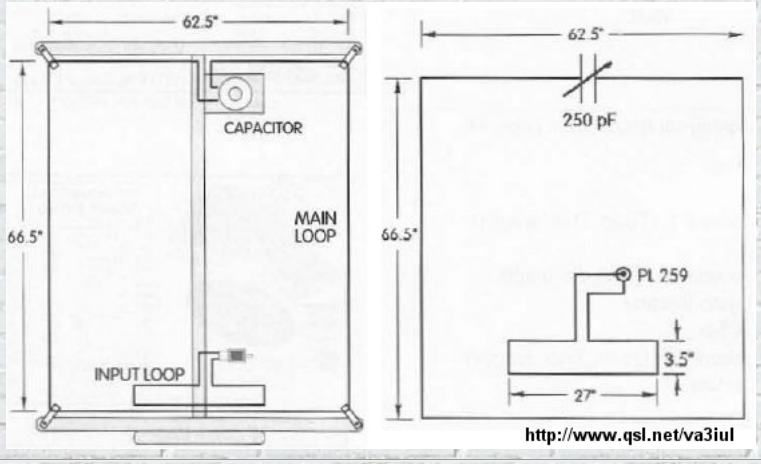

89 - Indoor Loop Antenna for 80m

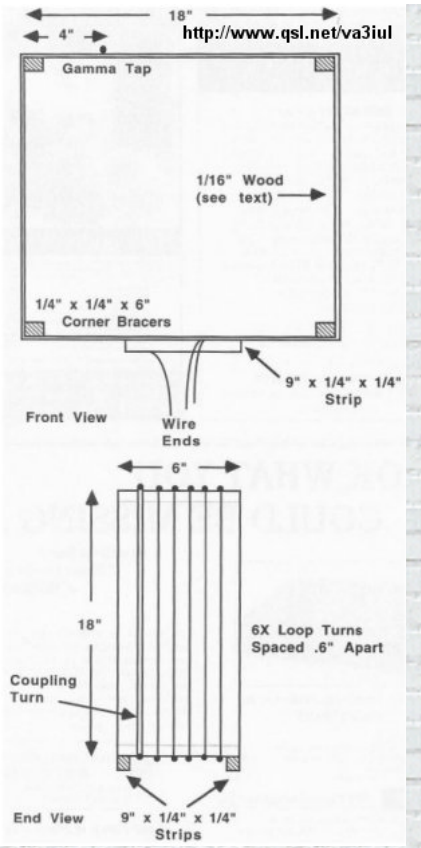

90 - Double-Delta Antenna 80m and 40m

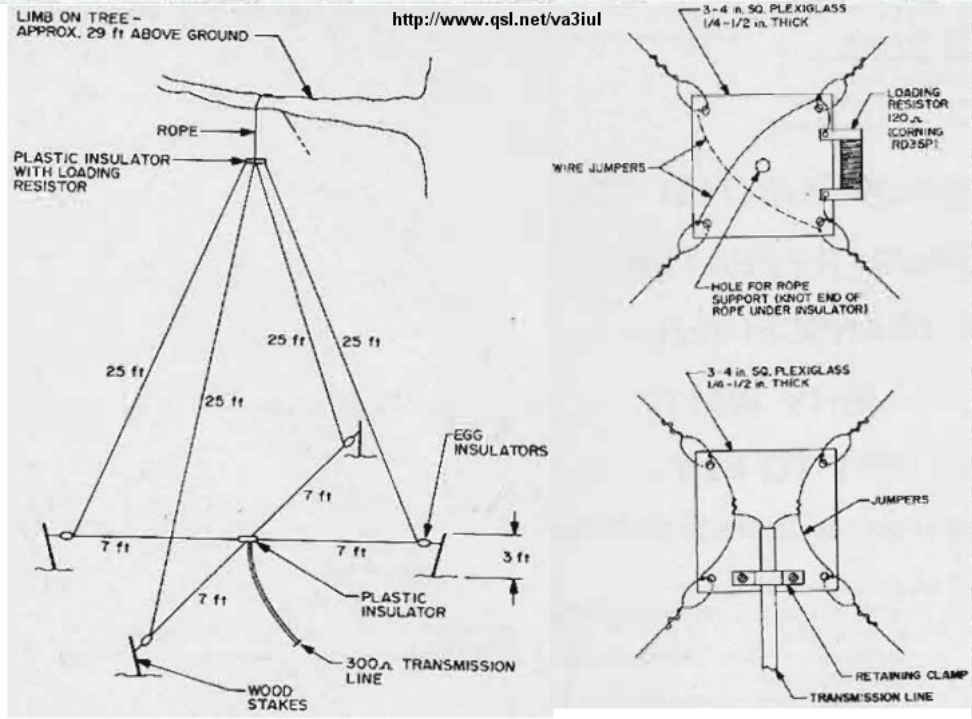

91 - Inductance-Loaded Shortened Dipole for 160m

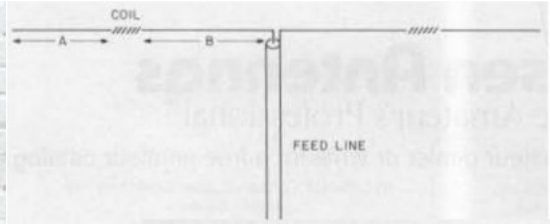

Overall Length (ft.)	Element A Length	Number Of Coil Turns	Element B Length
246.3	full-size antenna		
221.3	66.5	10	44.3
197.1	59.1	20	39.4
172.4	51.7	33	34.5
147.8	44.3	48	29.6
123.2	36.9	65	24.6
98.5	29.6	86	19.7

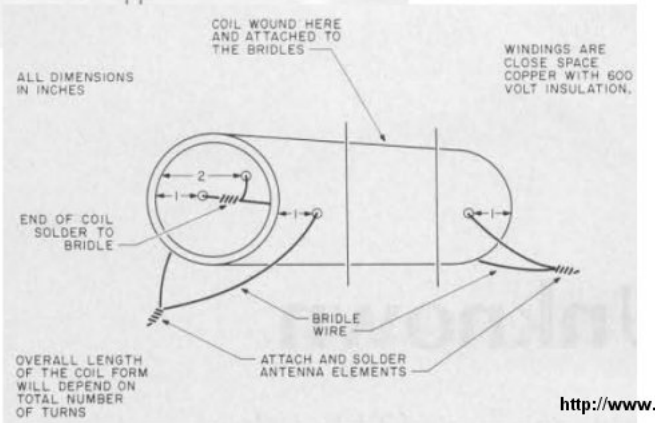

92 - V-Beam Antenna for 15m

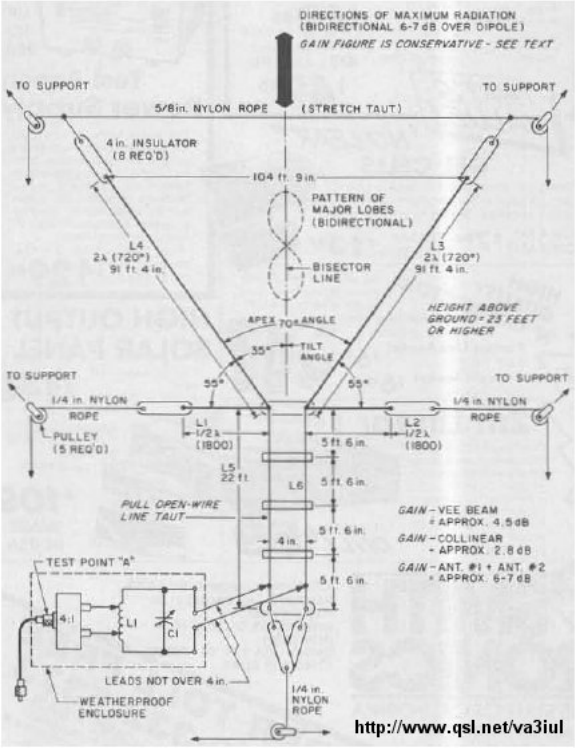

93 - Picnic Vertical Wire Antenna

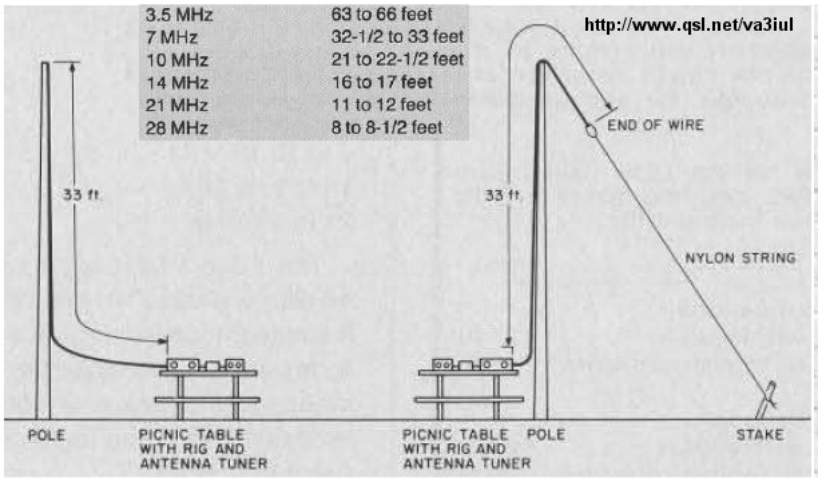

94 - Laid-Back Quad Antenna for 80m

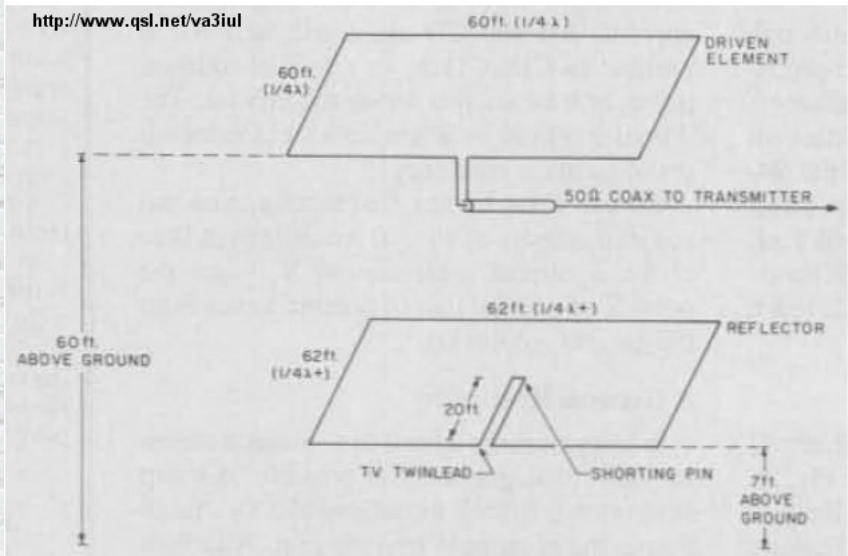

95 - Phased Loop Antenna

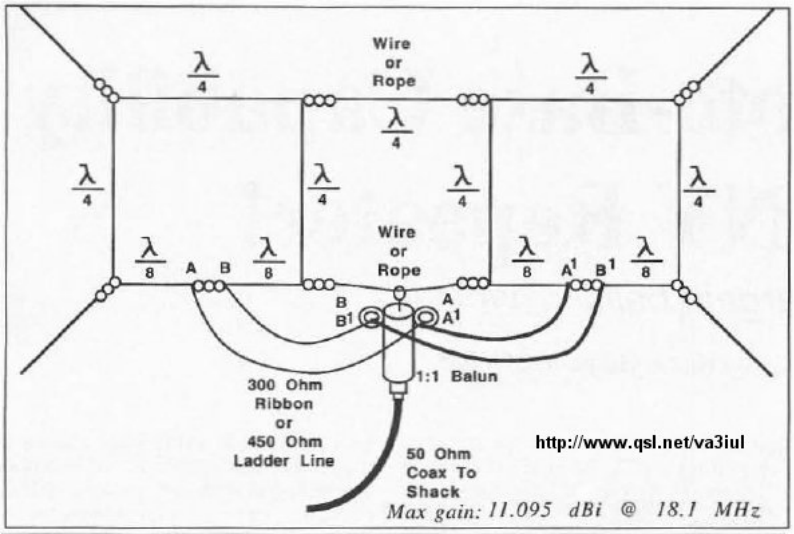

	λ/4	λ/8	300Ω Ribbon	450Ω Ladderline
40m	34.9 ft.	17.5 ft.	53.3 ft.	62.2 ft.
20m	17.6 ft.	8.8 ft.	27.0 ft.	31.2 ft.
17m	13.9 ft.	6.9 ft.	21.2 ft.	25.2 ft
15m	11.8 ft.	5.9 ft.	18.1 ft.	21.97 ft.
10m	8.67 ft.	4.33 ft.	13.2 ft.	15.33 ft.

96 - Loop Antenna for TX for 160m

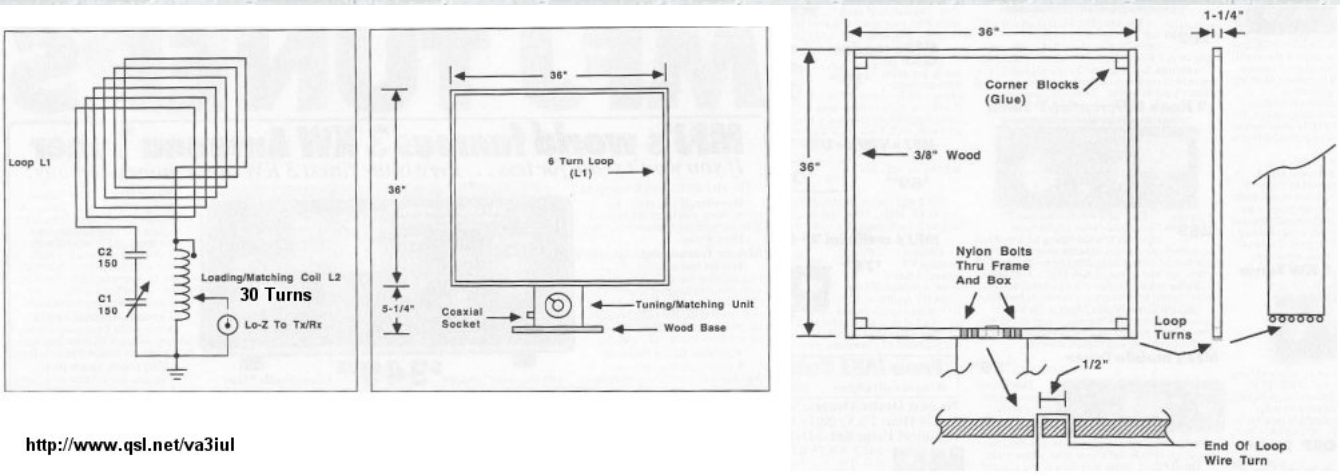

97 - Morgain-Dipole Antenna for 160m and 80m

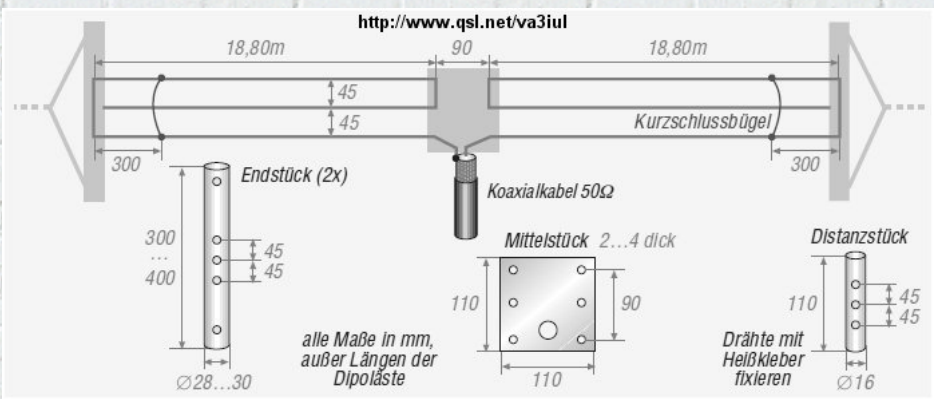

98 - ZL-Special for 20m, 15m, 10m

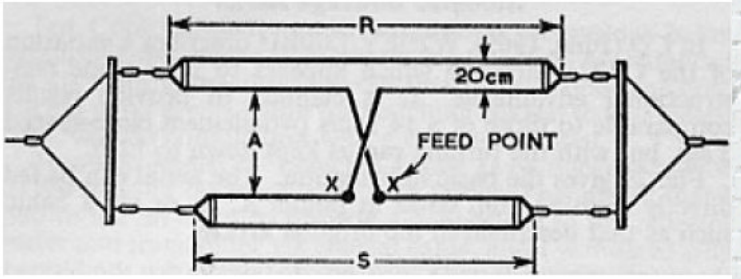

	S	R	A	A
28 Mc/s	5·09m	5·39m	1·29m	½λ
	4·17m	4·42m	1·06m	$\frac{1}{10}$λ
21 Mc/s	6·85m	7·24m	1·72m	½λ
	5·62m	5·94m	1·41m	$\frac{1}{10}$λ
14 Mc/s	10·30m	10·85m	2·58m	½λ
	8·45m	8·90m	2·12m	$\frac{1}{10}$λ

http://www.qsl.net/va3iul

99 - Biconical Antenna

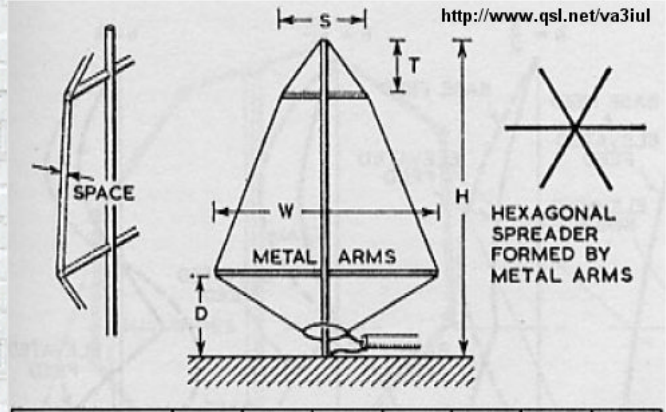

	H	W	D	T	S	SPACE	WIRE
3·5 – 15 Mc/s	43'	17'-8"	16'-10"	2'-2"	5'-10"	3"	NR 8
7 - 28 Mc/s	23'	9'-6"	9'	12"	3'-2"	2"	NR 10
14 - 56 Mc/s	12'	5'	4'-9"	8"	1'-8"	1"	NR 12

100 - Directive Delta-Birdcage Antenna for 20m to 10m

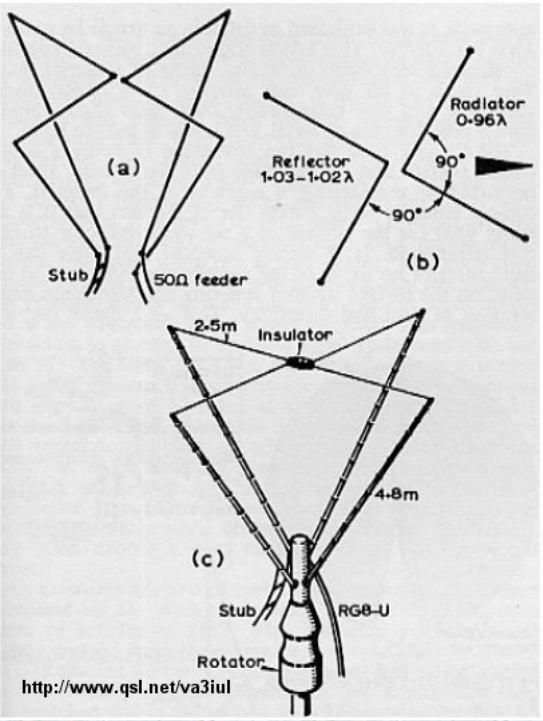

101 - Dual Polarization Antenna for 80m and 40m

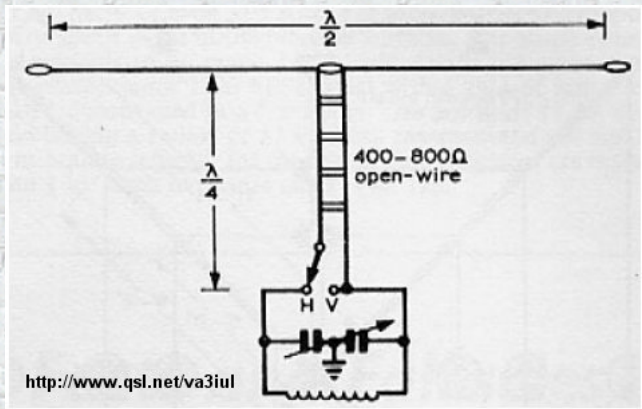

102 - Directive 300-ohm-Ribbon Folded Dipole for 15m

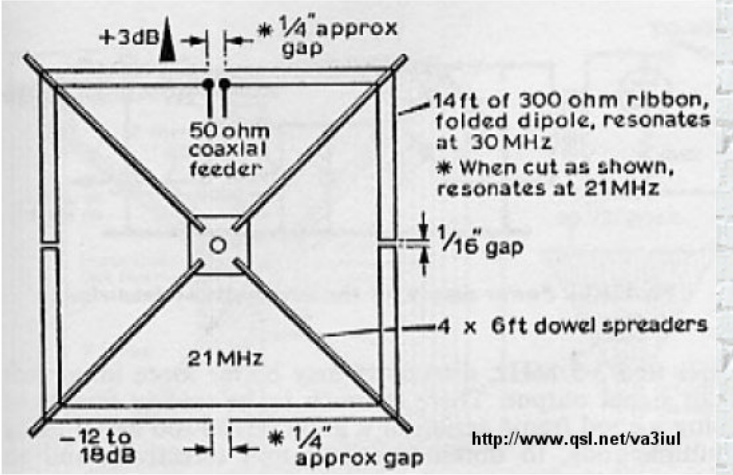

103 - Miniature Directive Antenna for 10m

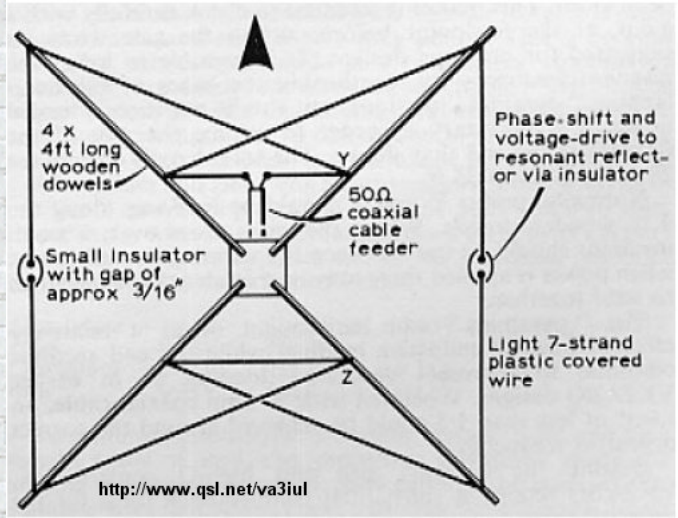

104 - Biquad Antenna 12dBi-Gain for 2.4GHz

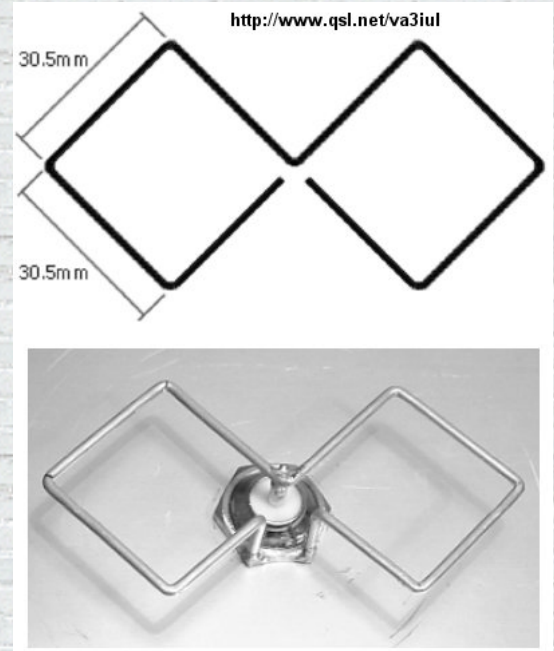

105 - Dual-Rhomboid Antenna for 435MHz to 870MHz

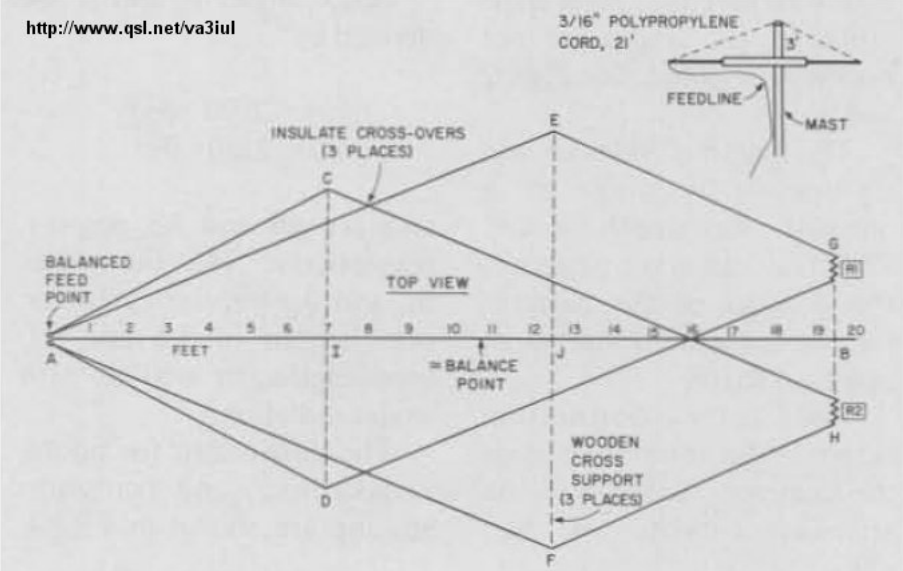

Dual rhomboid antenna for 435-870 MHz. Beamwidth ≈ 10° H x 6° V. Gain over DP ≈ 26 dB. Boom length: AB = 19'6". Support spacing : AI = 7'; IJ = 5'6"; JB = 7'. Support length: CD = 7'3"; EF = 10'3"; GH = 3'0". Rhomboid sides: AC, AD, EG, FH = 7'9.5"; AE, AF, CH, DG = 13'5.5". Feedline: Wire needed: 14 AWG formvar, ≈ 86'0". Boom material: AI, JB = wood; IJ = metal. Cross support: CD, EF, GH = wood. Terminators: R1, R2 = 600 Ohms; Watts

106 - Double-Bazooka Antenna for 80m

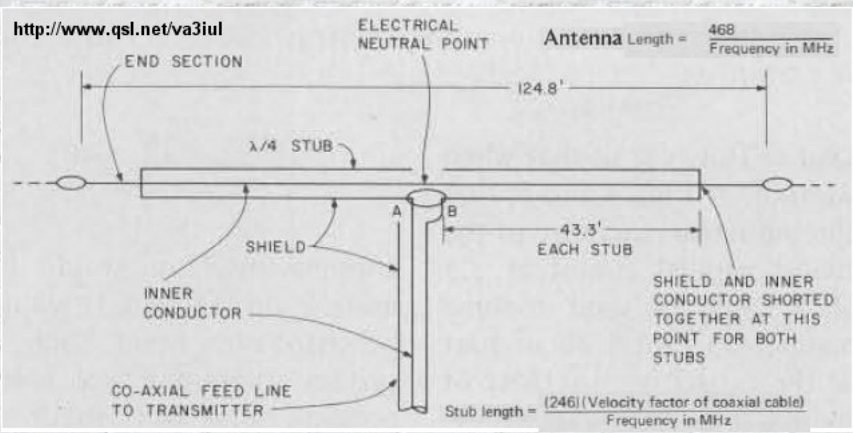

107 - J-Style Antenna

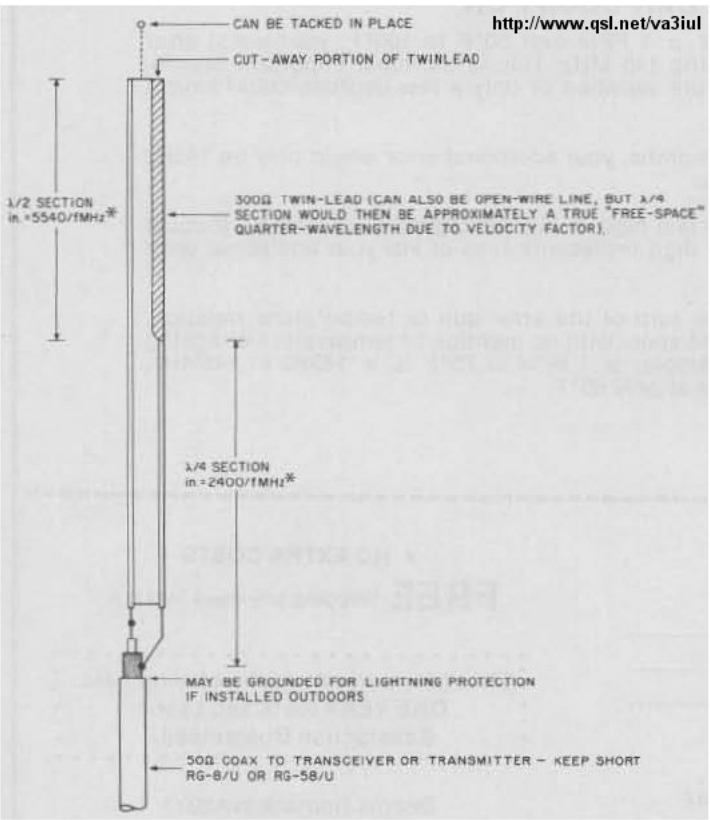

108 - Vertical / Horizontal / Circular Polarization Antenna

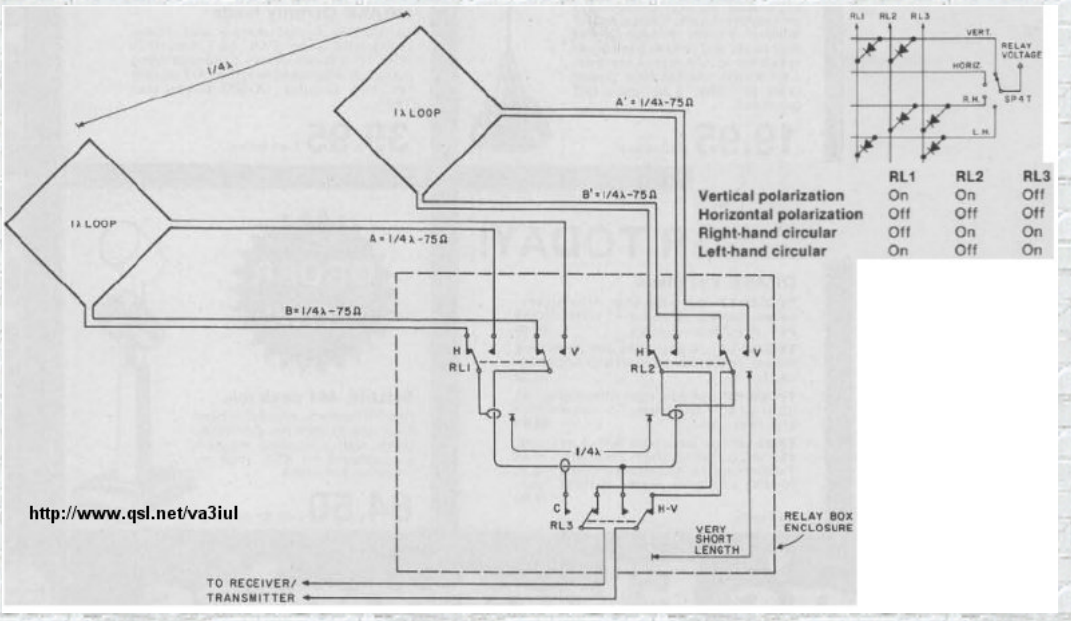

	RL1	RL2	RL3
Vertical polarization	On	On	Off
Horizontal polarization	Off	Off	Off
Right-hand circular	Off	On	On
Left-hand circular	On	Off	On

109 - Coax Inverted-L Antenna for 80m

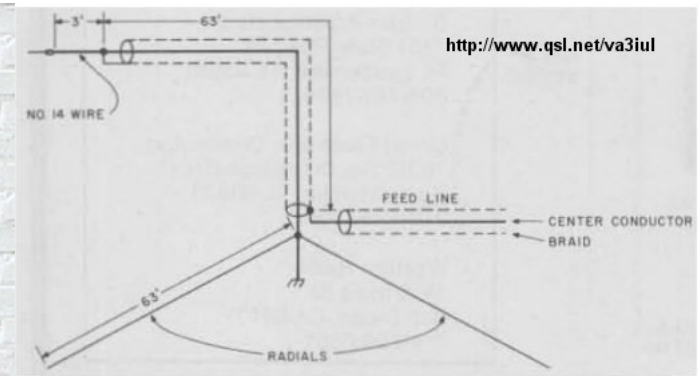

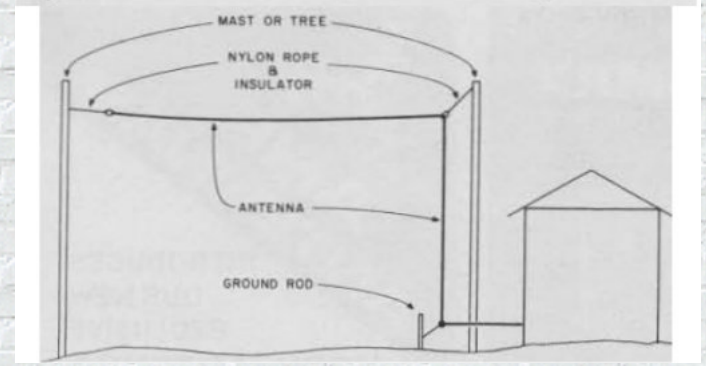

110 - Indoor Compact Loop Antenna for 80m

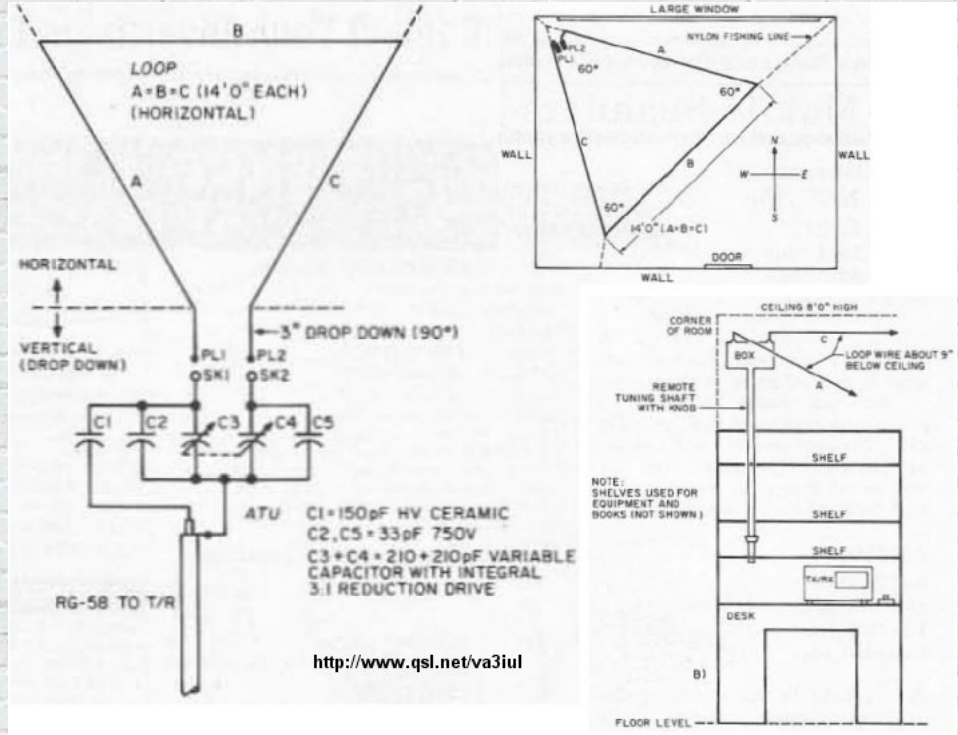

111 - Helix Antenna

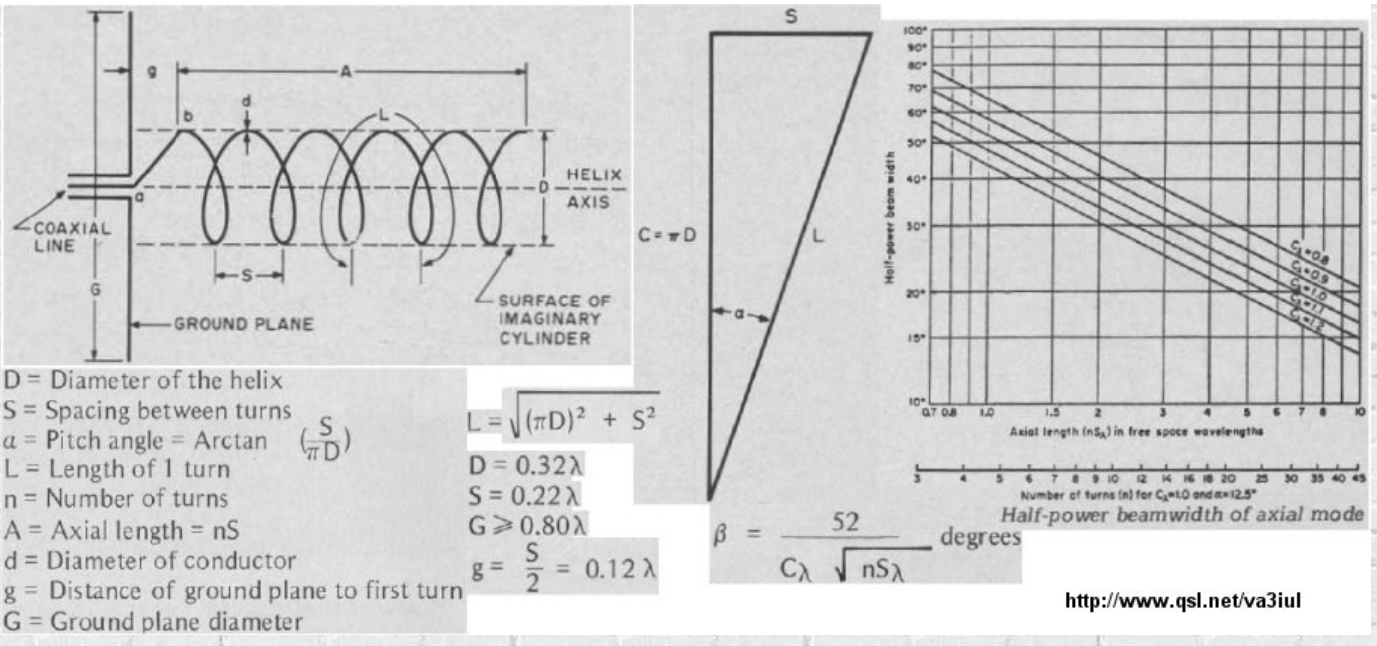

112 - Novice Vertical Antenna for 80m, 40m, 15m, 10m

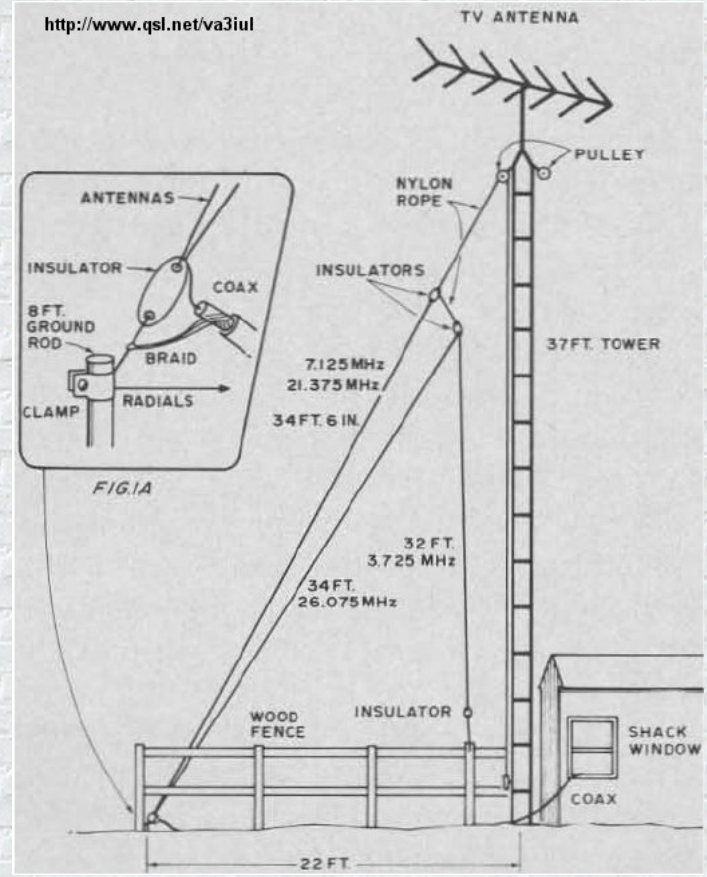

113 - Stub-Loaded Shortened Dipole for 80m

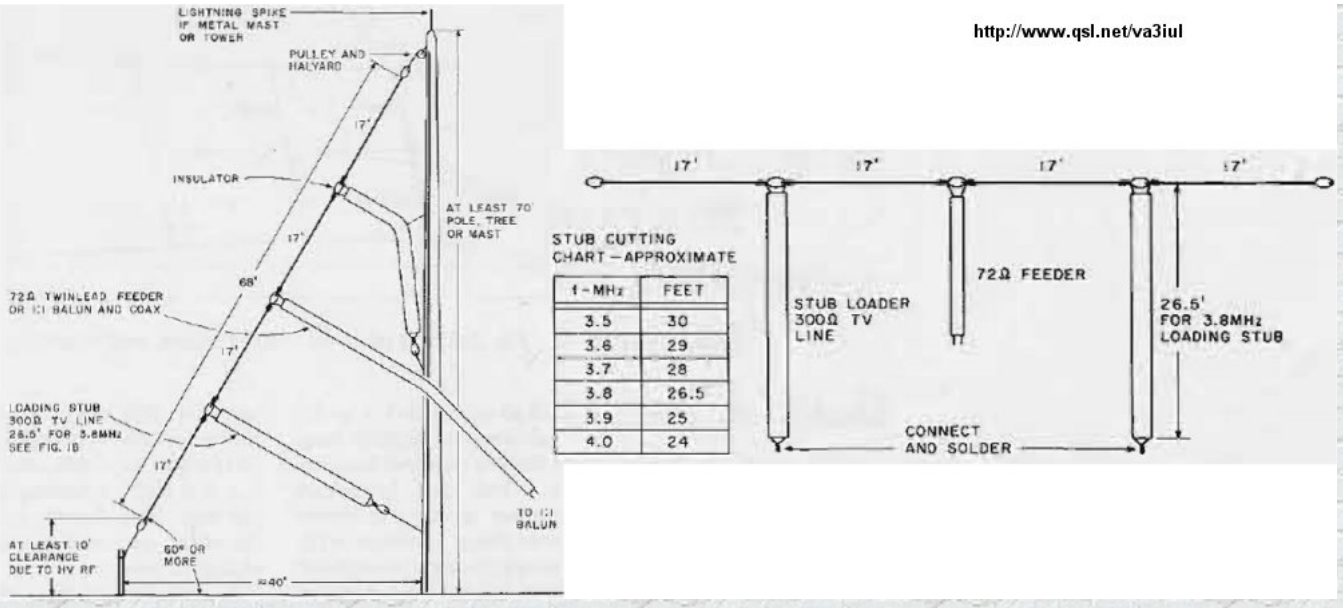

114 - Six-Band Wire-Stub Trap Antenna for 40m-10m

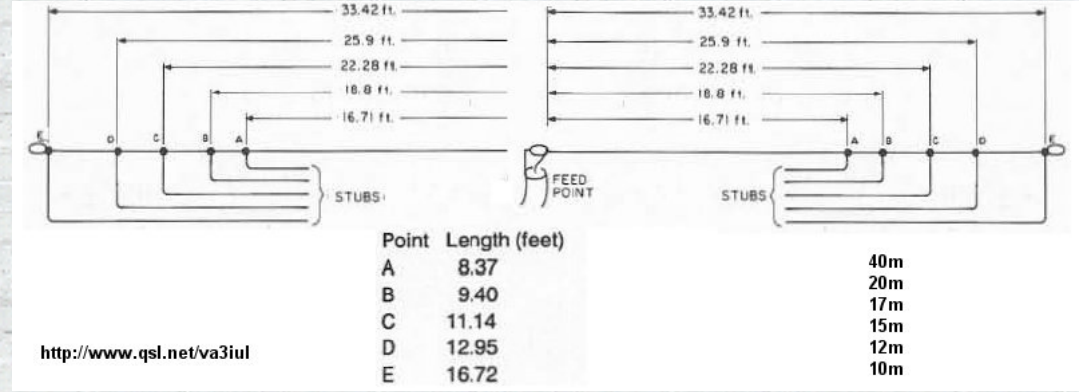

115 - Multiband Half-Wave Delta-Loop Antenna

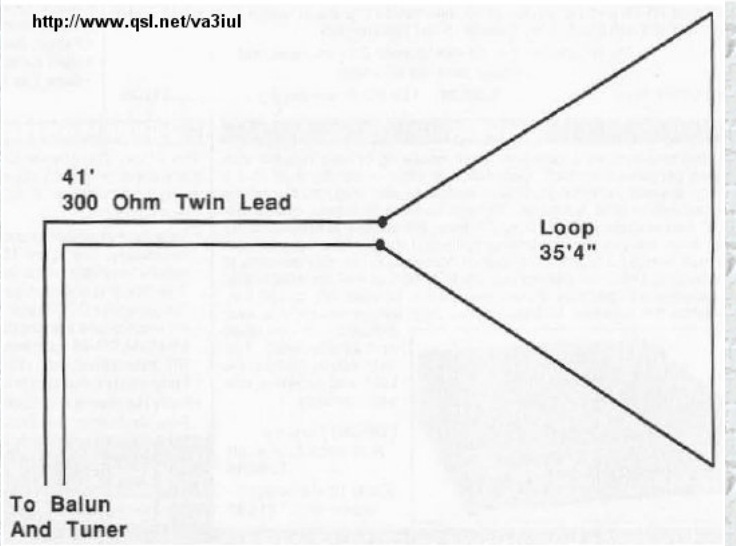

116 - Hybrid Vee for 20m, 17m

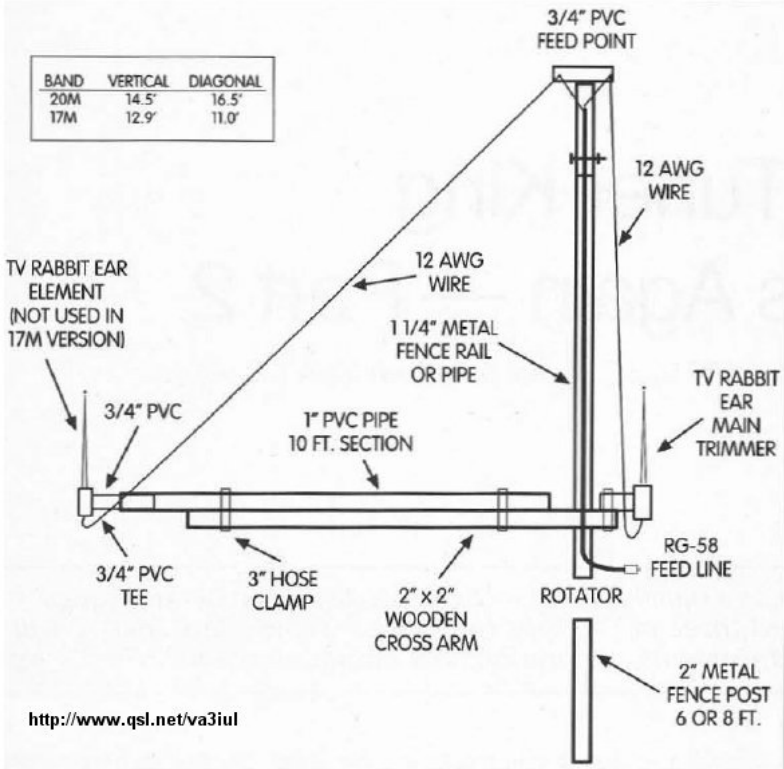

117 - Six-Shooter Array Antenna, Gain=7.5dB

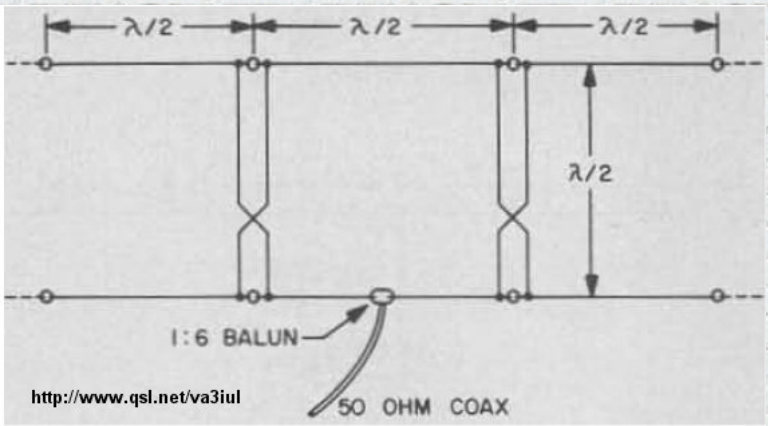

118 - Multiband Ground-Plane Antenna for 10m, 15m, 20m

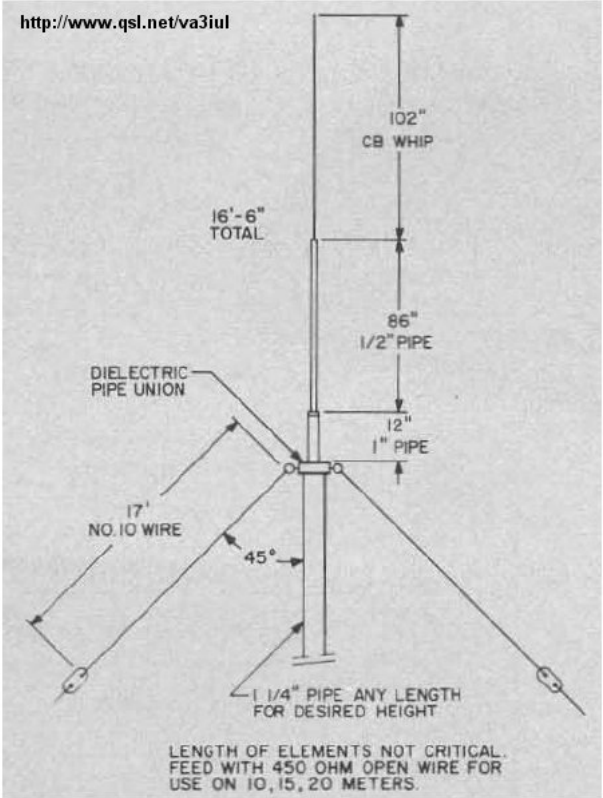

119 - Wire Superbeam Antenna for 10m, 15m, 20m

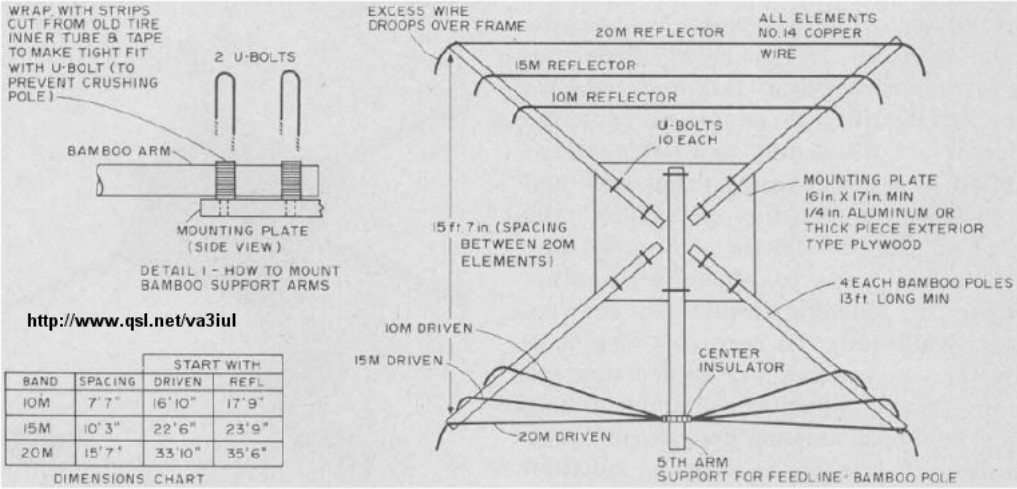

BAND	SPACING	START WITH DRIVEN	START WITH REFL
10M	7'7"	16'10"	17'9"
15M	10'3"	22'6"	23'9"
20M	15'7"	33'10"	35'6"

DIMENSIONS CHART

120 - Two Elements Delta-Loop Antenna

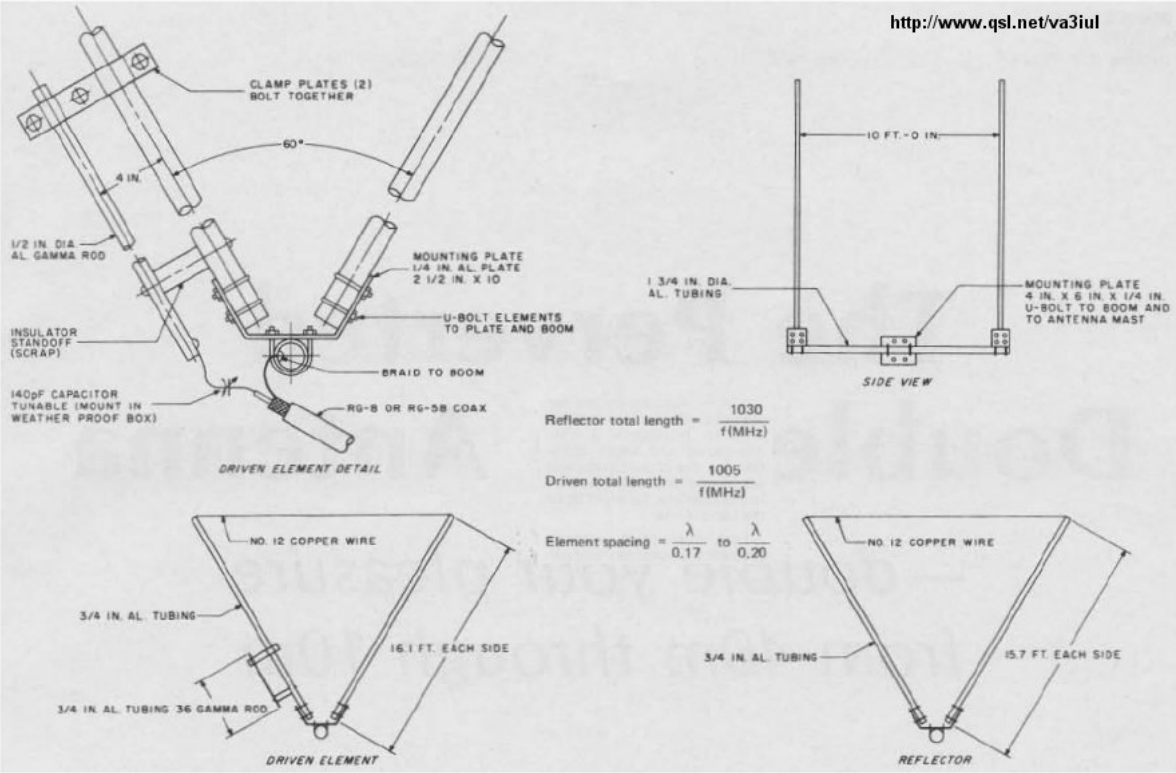

121 - Sterba Curtain Antenna

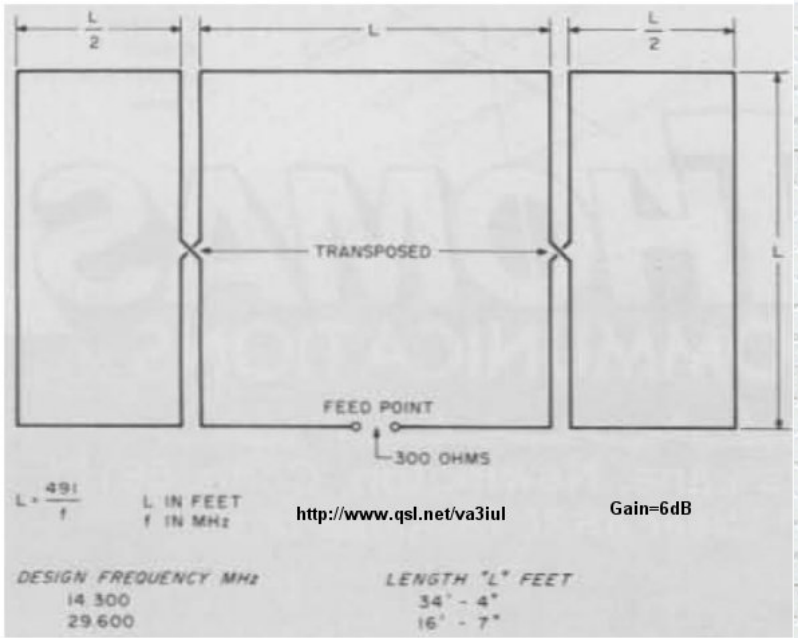

122 - Half-Wave Vertical Zepp Antenna

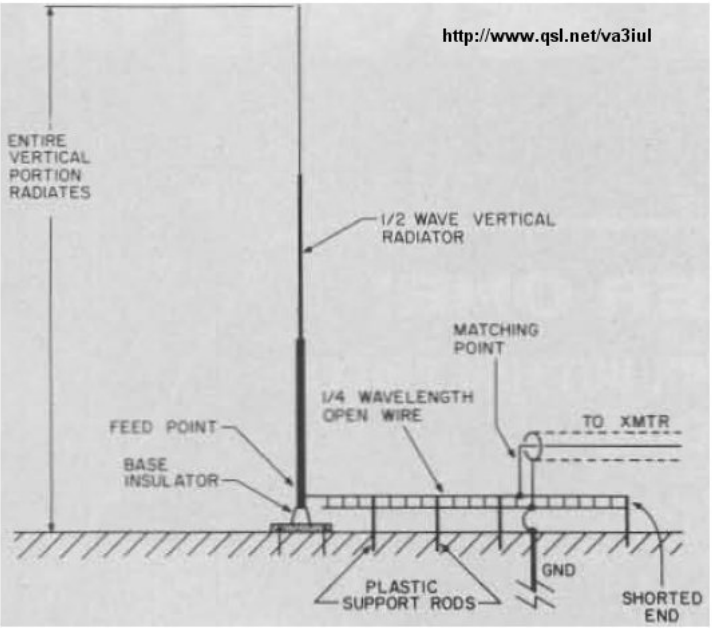

123 - Lazy-Loop Antenna for 40m

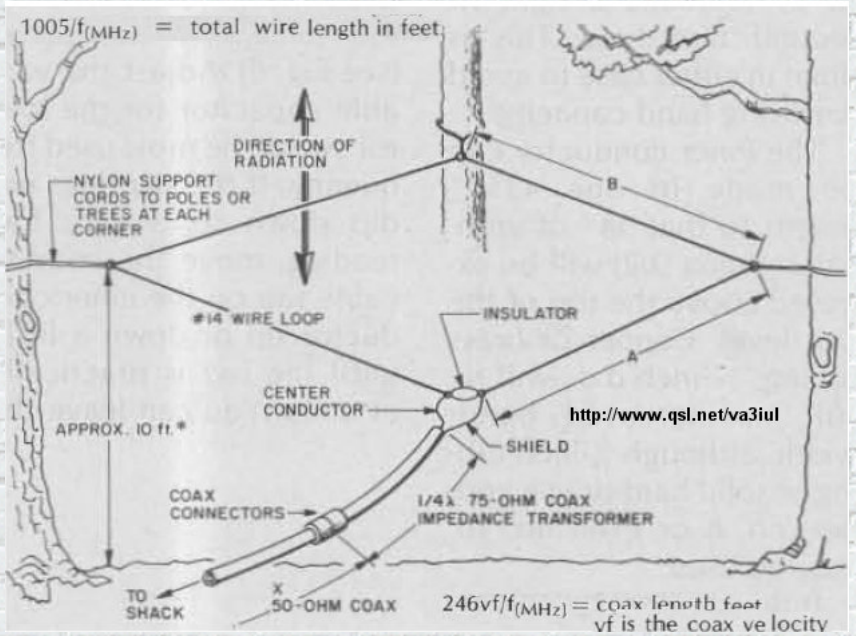

124 - Terminated Folded Dipole for 80m, 40m

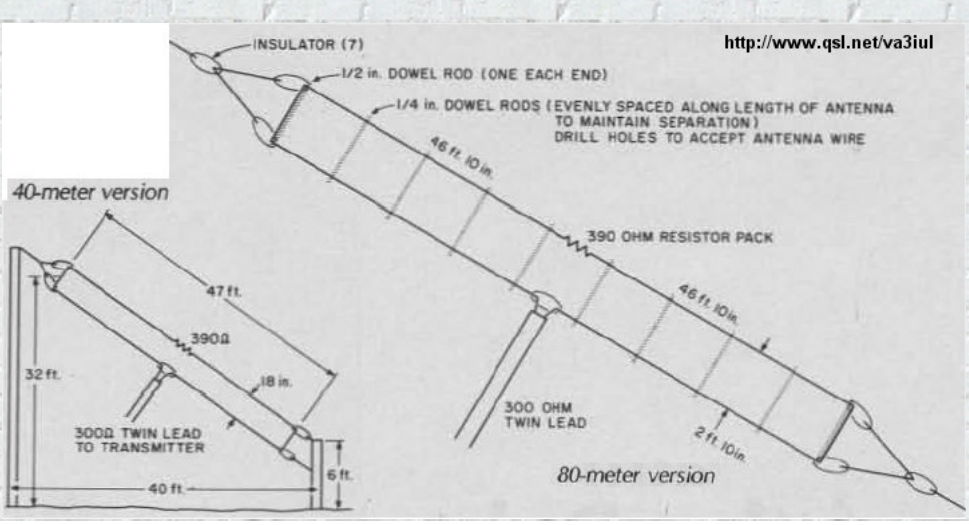

125 - Short-Fat Antenna for 15m

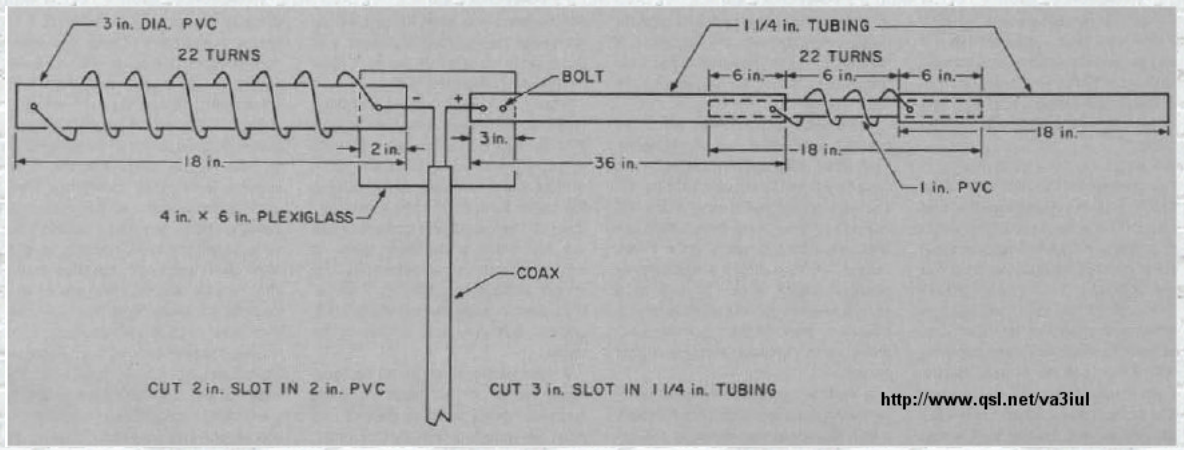

126 - Cobra Antenna for 80m

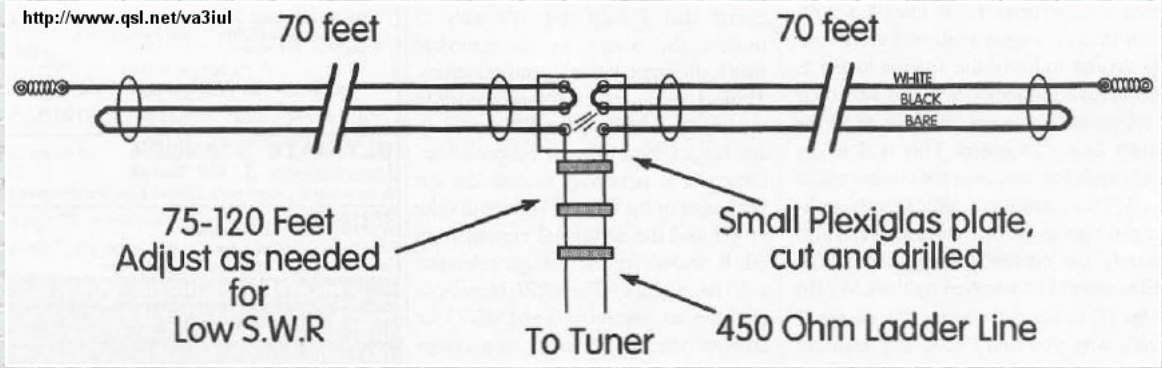

127 - Log-Periodic Wire Antenna for 20m, 15m, 10m

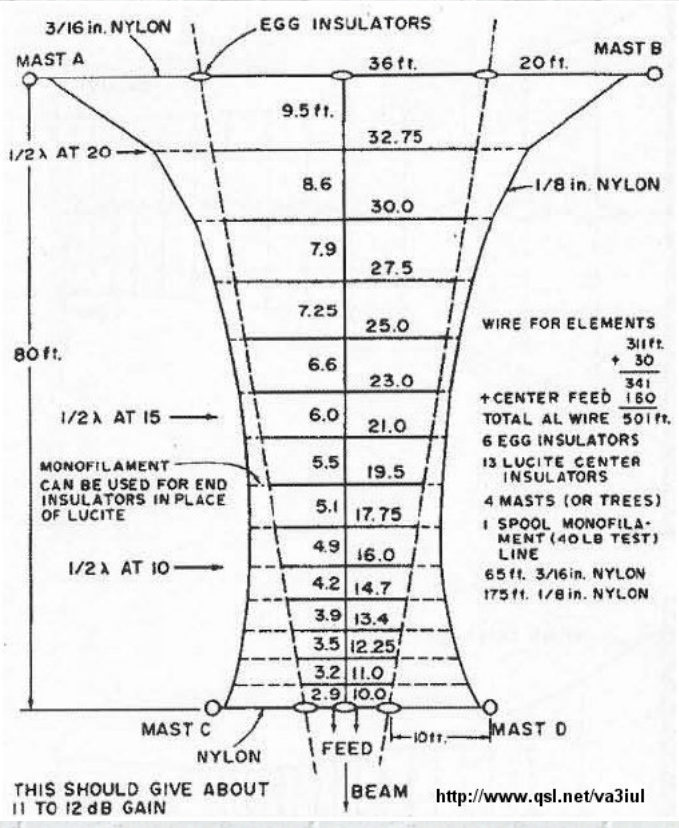

128 - 5-Element Log-Periodic Vertical Antenna for 80m, 40m, 20m

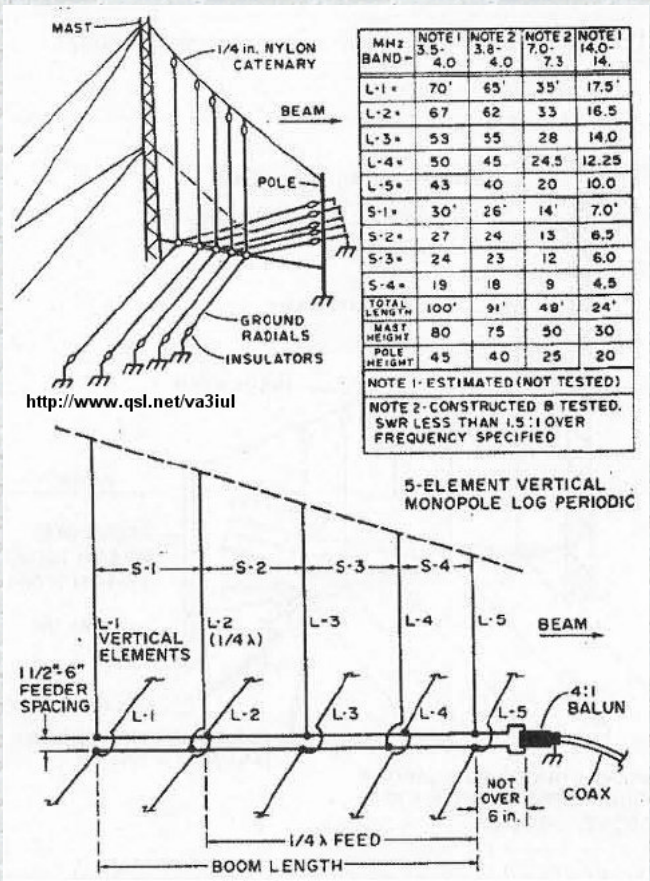

http://www.qsl.net/va3iul

MHz BAND →	NOTE 1 3.5-4.0	NOTE 2 3.8-4.0	NOTE 2 7.0-7.3	NOTE 1 14.0-14.
L-1 *	70'	65'	35'	17.5'
L-2 *	67	62	33	16.5
L-3 *	53	55	28	14.0
L-4 *	50	45	24.5	12.25
L-5 *	43	40	20	10.0
S-1 *	30'	26'	14'	7.0'
S-2 *	27	24	13	6.5
S-3 *	24	23	12	6.0
S-4 *	19	18	9	4.5
TOTAL LENGTH	100'	91'	48'	24'
MAST HEIGHT	80	75	50	30
POLE HEIGHT	45	40	25	20

NOTE 1 - ESTIMATED (NOT TESTED)

NOTE 2 - CONSTRUCTED & TESTED. SWR LESS THAN 1.5:1 OVER FREQUENCY SPECIFIED

129 - 2m Vertical Wire Antennas

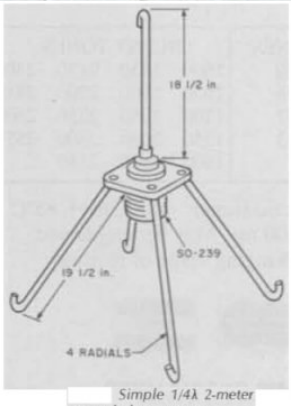

Simple 1/4λ 2-meter ground-plane antenna.

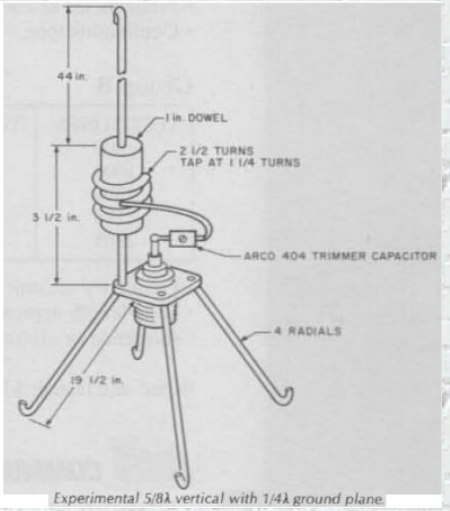

Experimental 5/8λ vertical with 1/4λ ground plane.

http://www.qsl.net/va3iul

130 - Earth-Mover Inverted-V Antenna for 40m

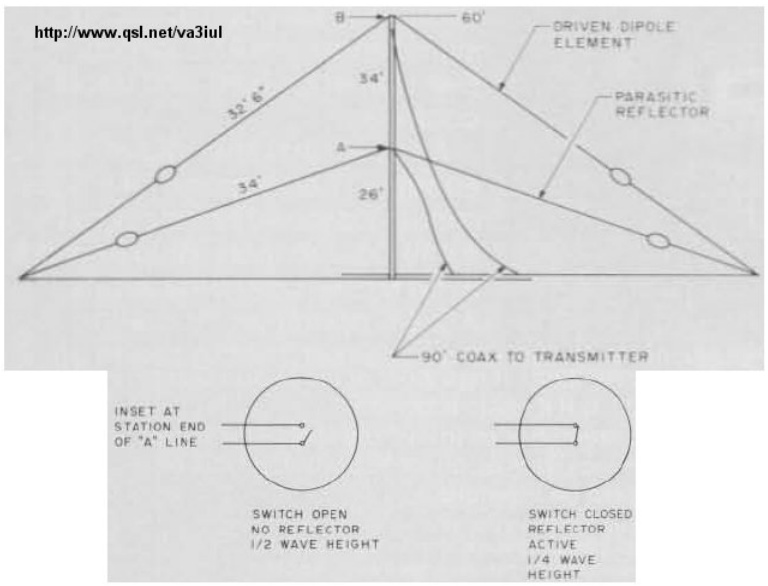

131 - Coax-Cable Collinear Antennas

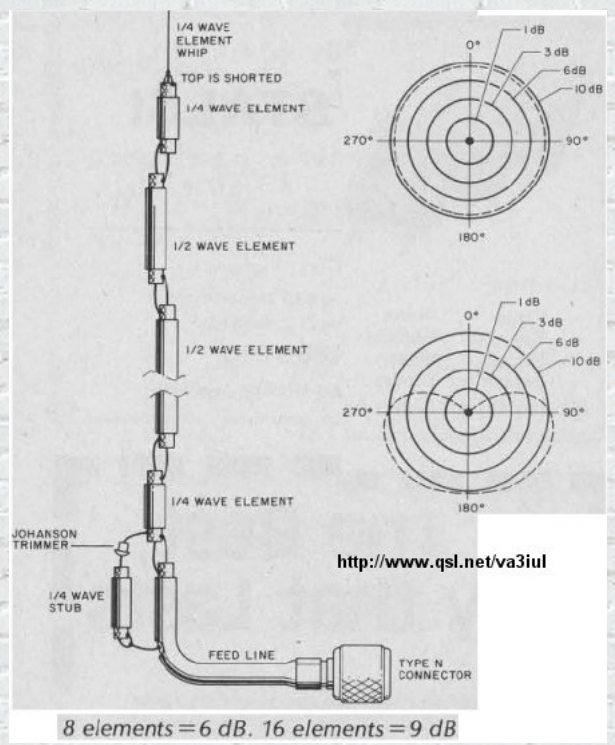

132 - Double Bobtail Antenna for 20m

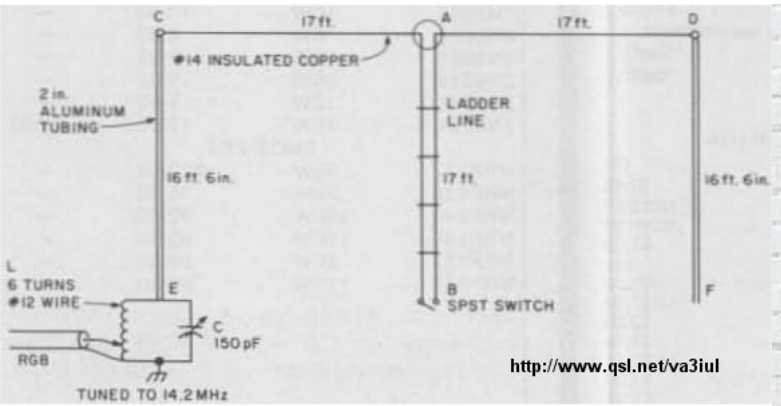

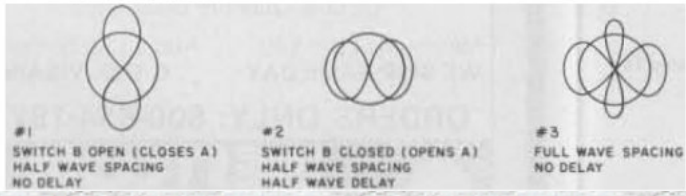

133 - Collinear Zepp Antenna

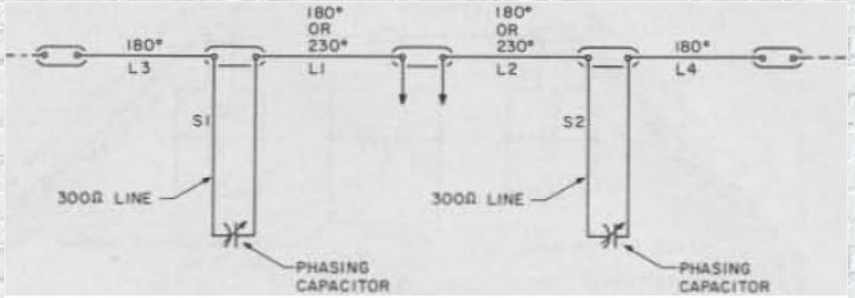

http://www.qsl.net/va3iul

L1 - L2 = 180° - 468/f WHERE f = MHz
L1 - L2 = 230° - 600/f WHERE f = MHz

S1 - S2 = 246 × 0.82/f WHERE f = MHz
S1 - S2 MADE FROM 300Ω TV RIBBON.
MAKE ABOUT 6 inches LONGER THAN
CALCULATED VALUES. TRIM IF NECESSARY.

134 - Taylor Vee Antenna for 20m

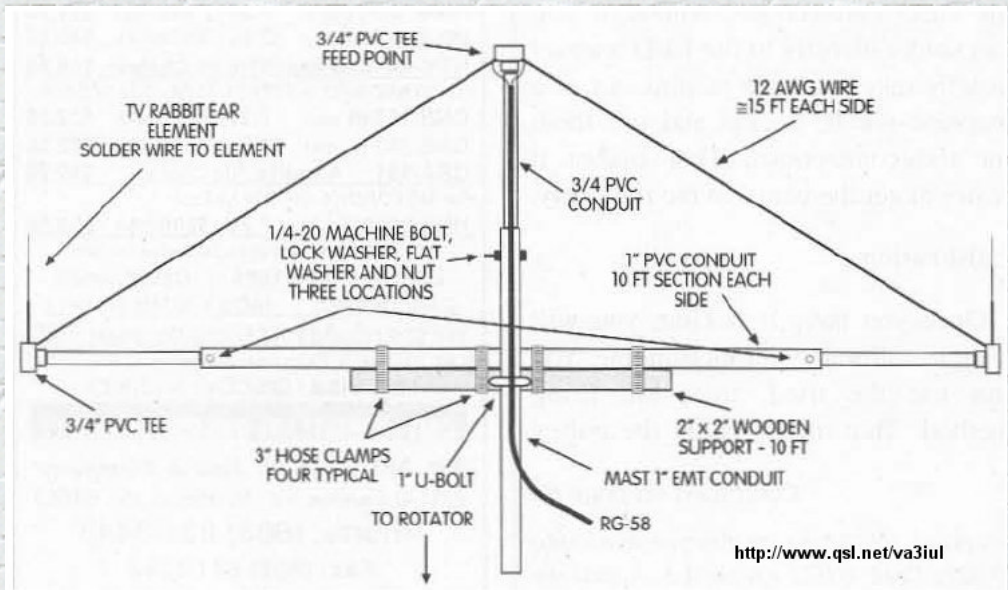

135 - Collinear Vertical Antenna 6dB-Gain for 2m, 1.3m, 73cm

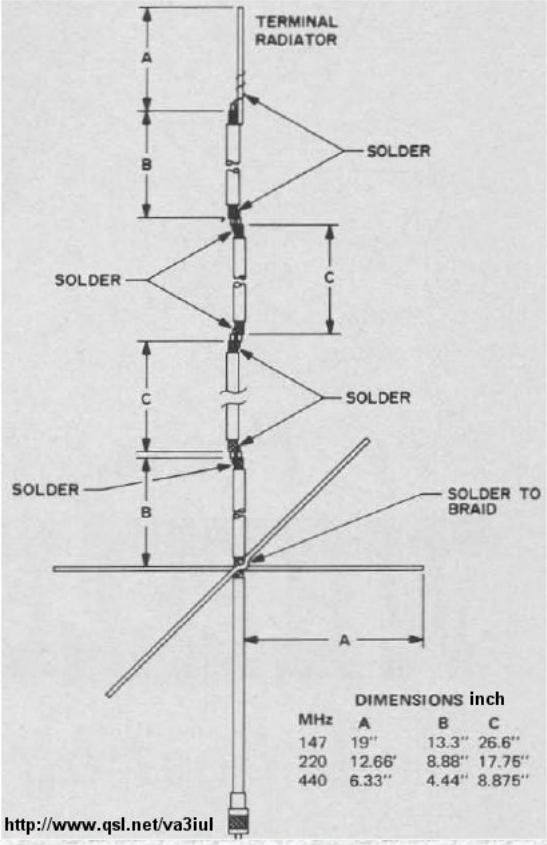

136 - Bi-Loop Antenna for 20m

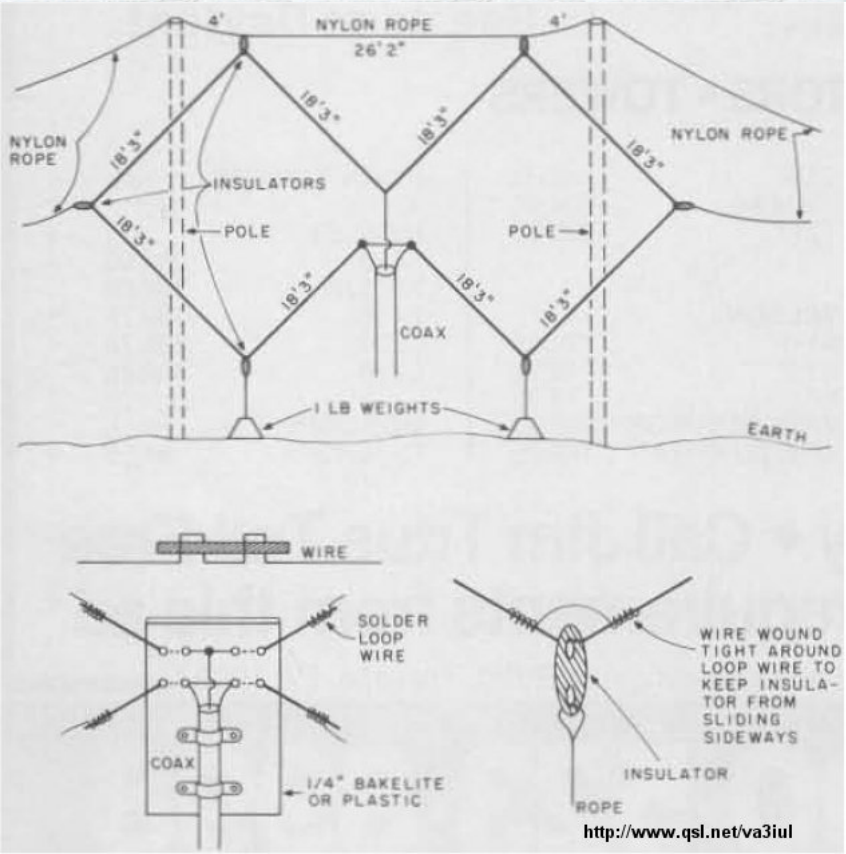

137 - Wire Beam 6dBd-Gain for 10m

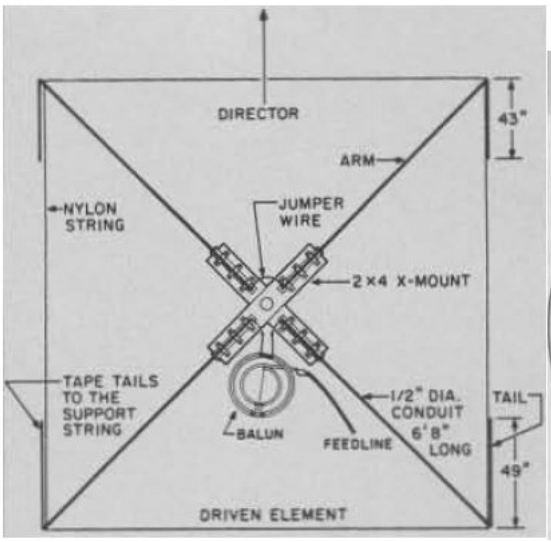

http://www.qsl.net/va3iul

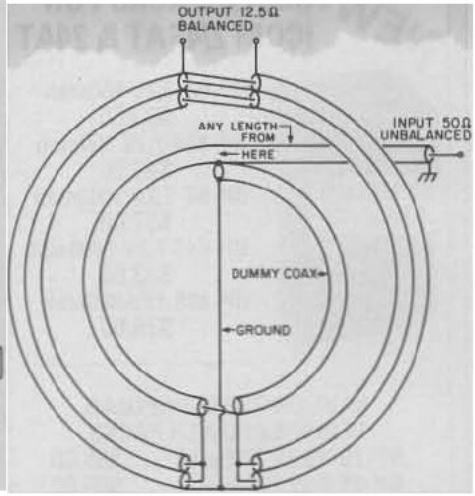

138 - Sloping Diamond Antenna 4dB-Gain for 40m

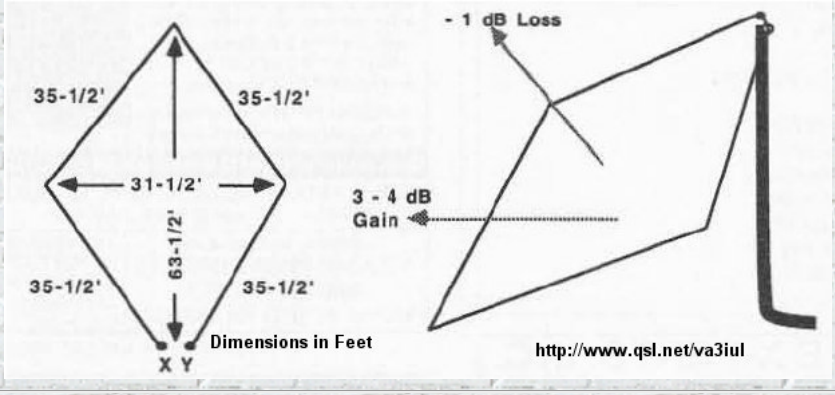

139 - Twisted Loop Antenna for 160m

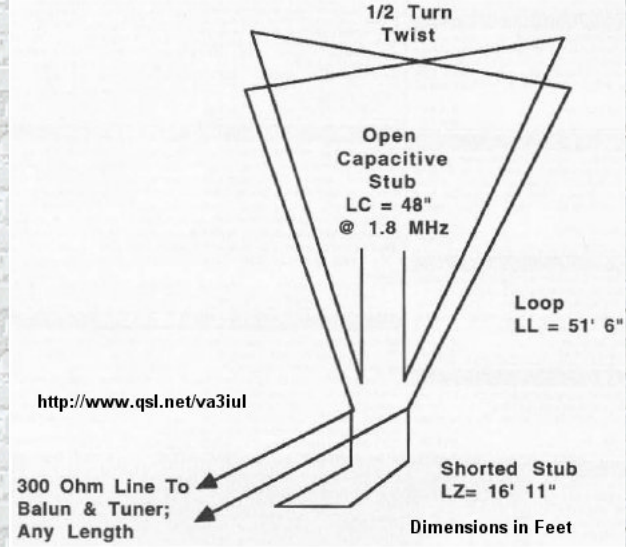

140 - DX RX Loop Antenna for 160m

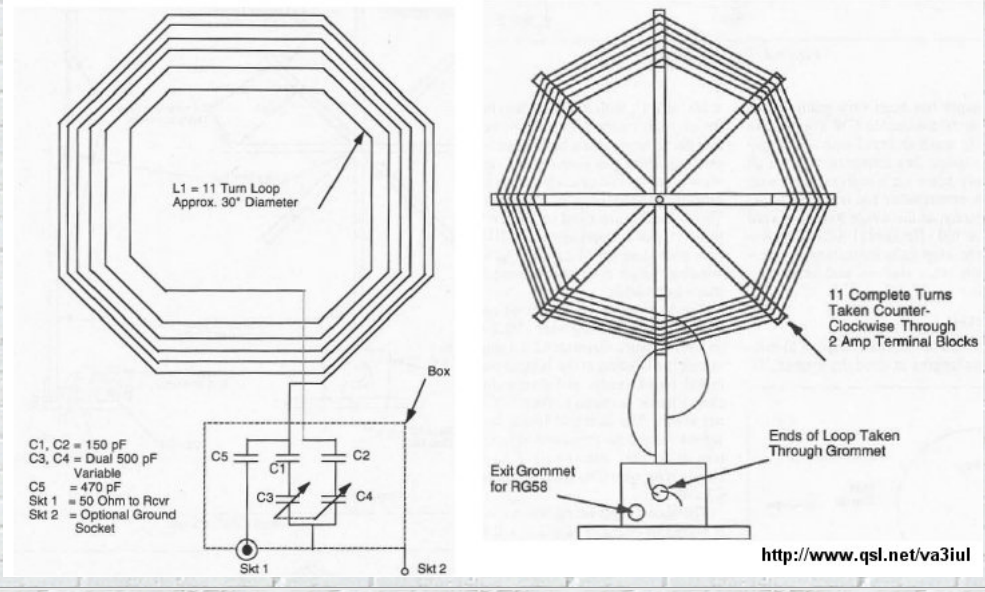

141 - Hentenna 3dB-Gain for 10m, 6m, 2m

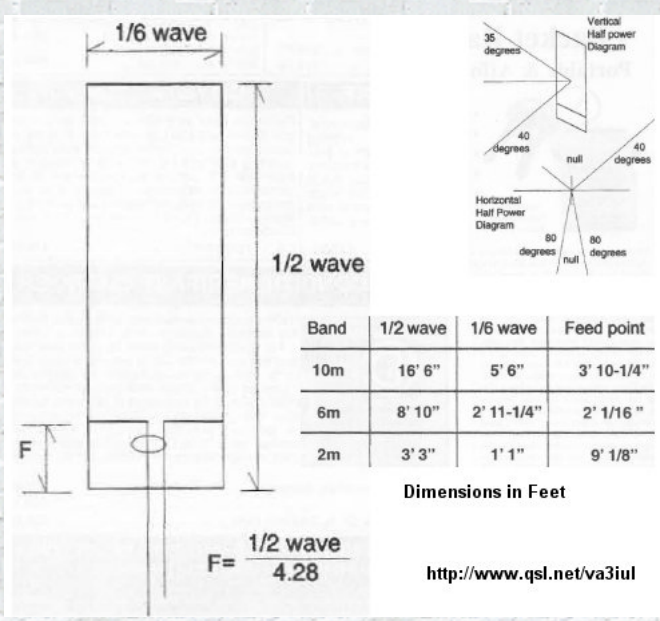

Band	1/2 wave	1/6 wave	Feed point
10m	16' 6"	5' 6"	3' 10-1/4"
6m	8' 10"	2' 11-1/4"	2' 1/16 "
2m	3' 3"	1' 1"	9' 1/8"

142 - VK2AAR Wire Antenna for 20m

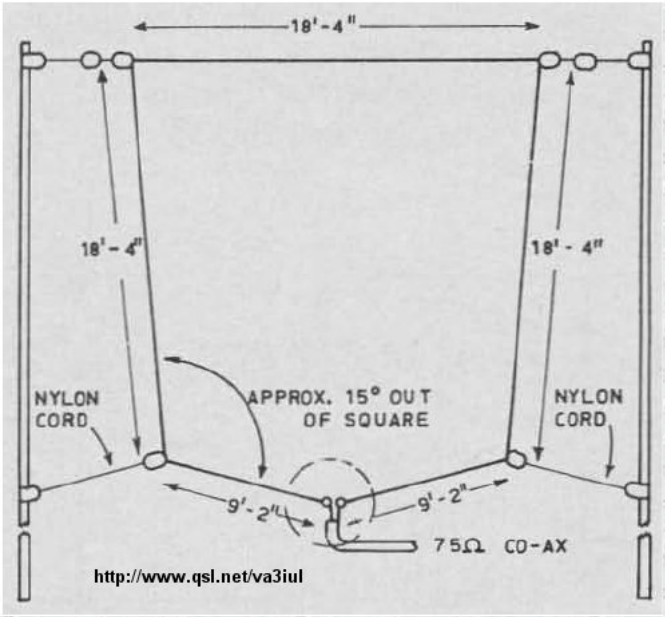

143 - 2-Elements Quad Antenna for 6m

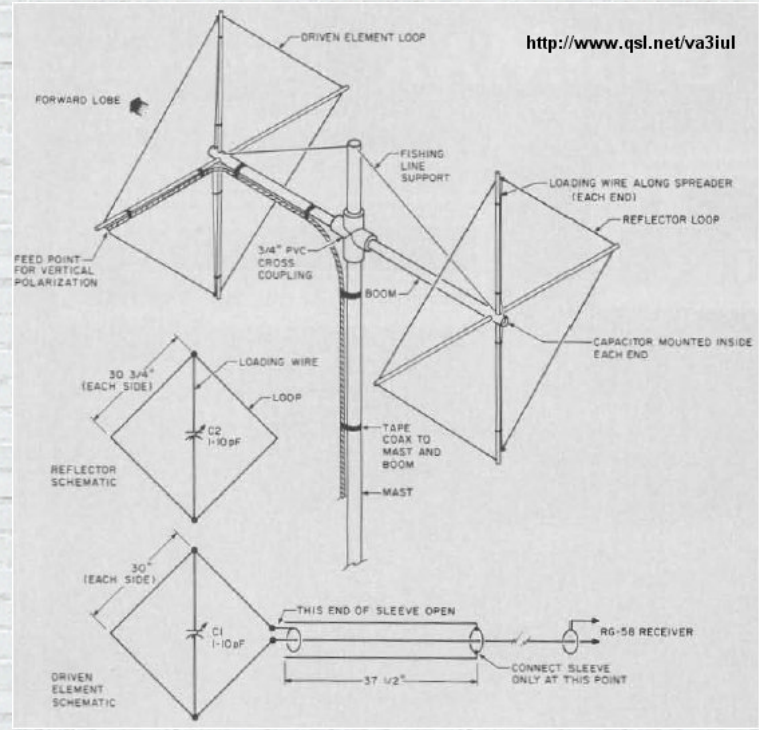

144 - Hula-Loop Bidirectional 6dB-Gain Antenna for 17m

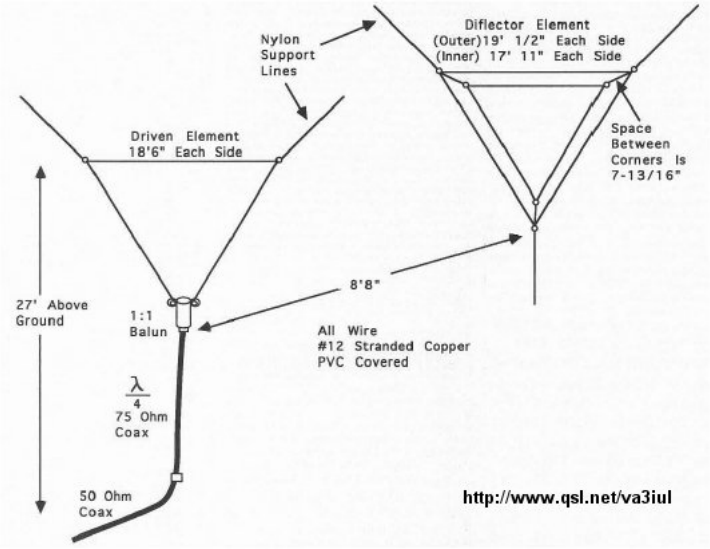

145 - Moxon Rectangle Beam for 15m-10m

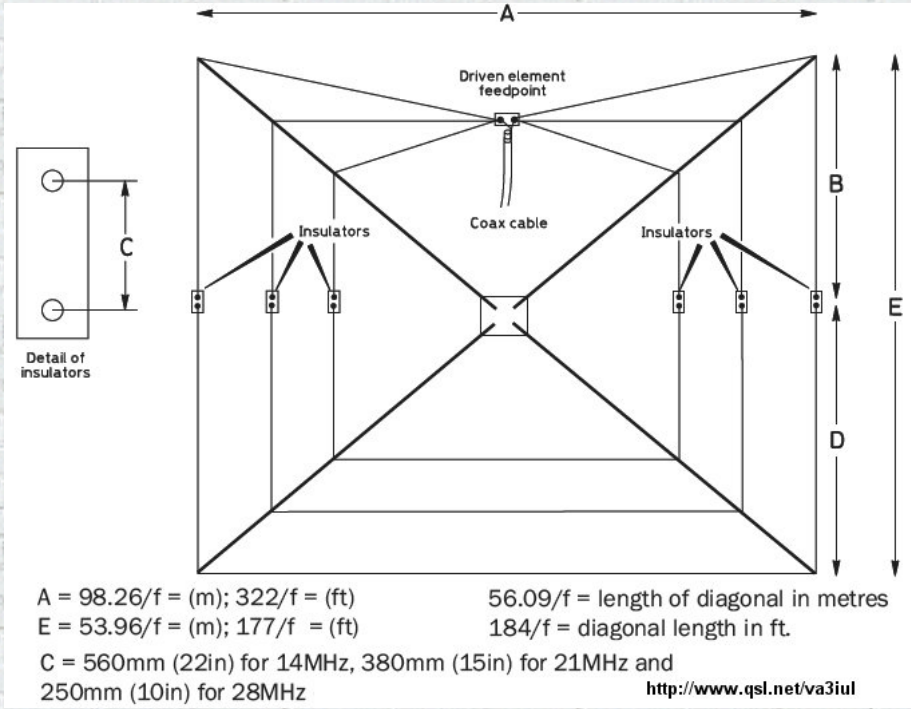

146 - Double-D Beam 4dB-Gain

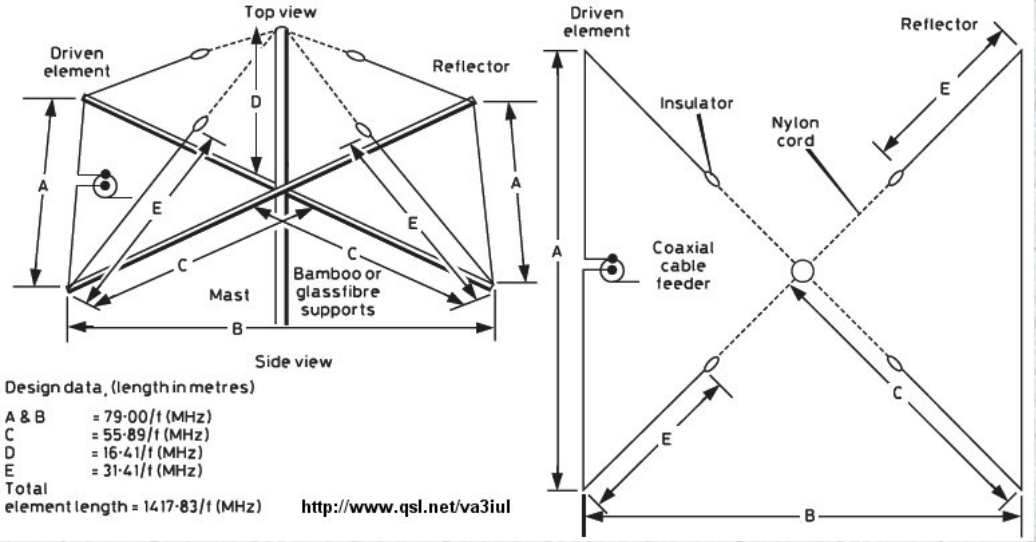

147 - KE4PT OCEF All-Band Dipole

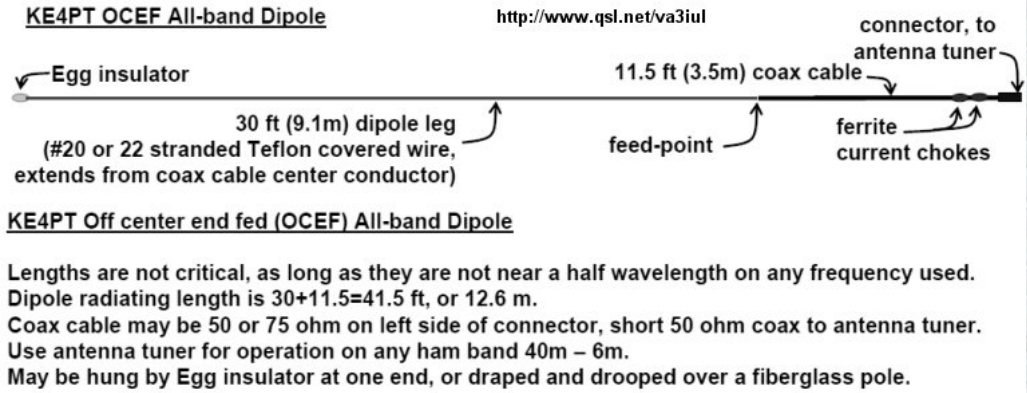

148 - Wire Quad Antenna for 40m

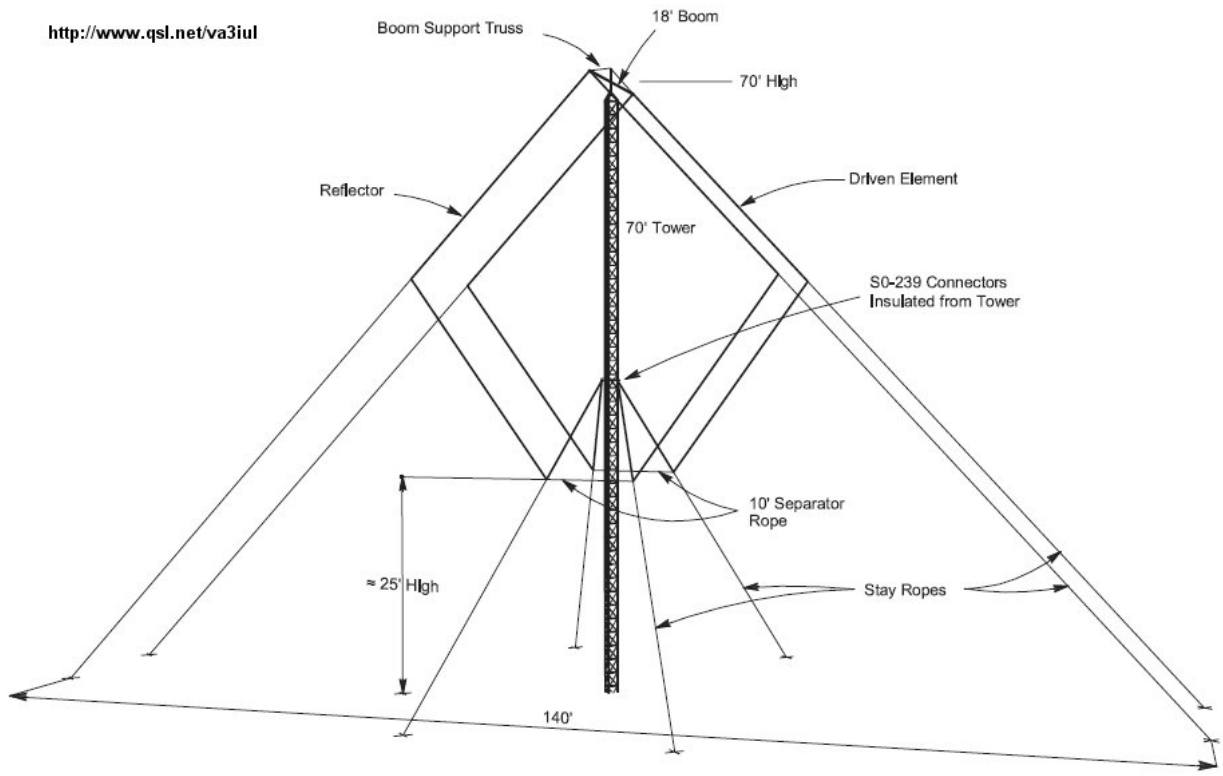

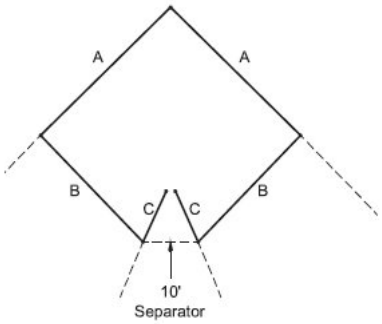

	7050 kHz, CW	7200 kHz, SSB
Length A, Reflector	31"6"	30"10-¾"
Length B, Reflector	28"2-¼"	27"7"
Length C, Reflector	15"7-¼"	15"
Total, Half Reflector	75"3-½"	73"5-¾"
Resonant Frequency	7030 kHz	7205 kHz
Length A, Driven	30"7-¼"	30"
Length B, Driven	27"3-½"	26"8-½"
Length C, Driven	14"7-½"	14"
Length, Half Driven	72"6-¼"	70"8-½"
Self-Resonant Frequency	7295 kHz	7480 kHz

149 - Inclined Dipole Antenna for 80m, 40m

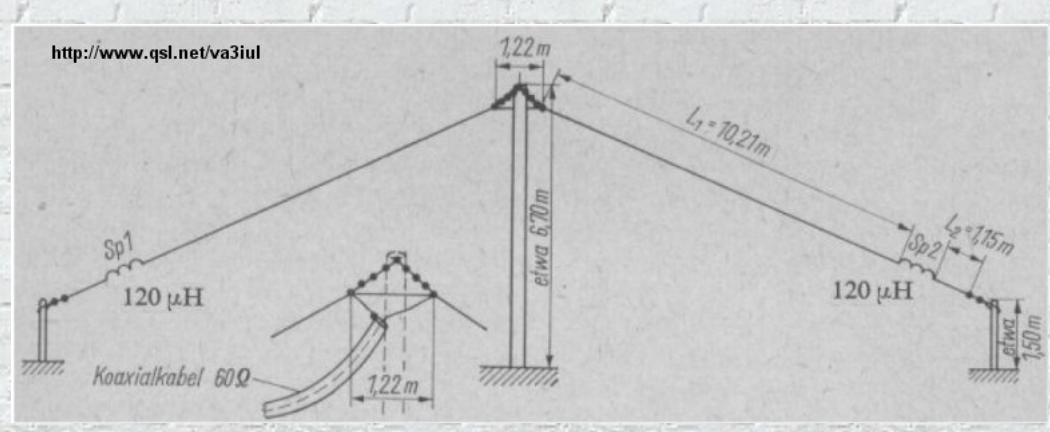

150 - Pyramidal Wire Antenna for 80m

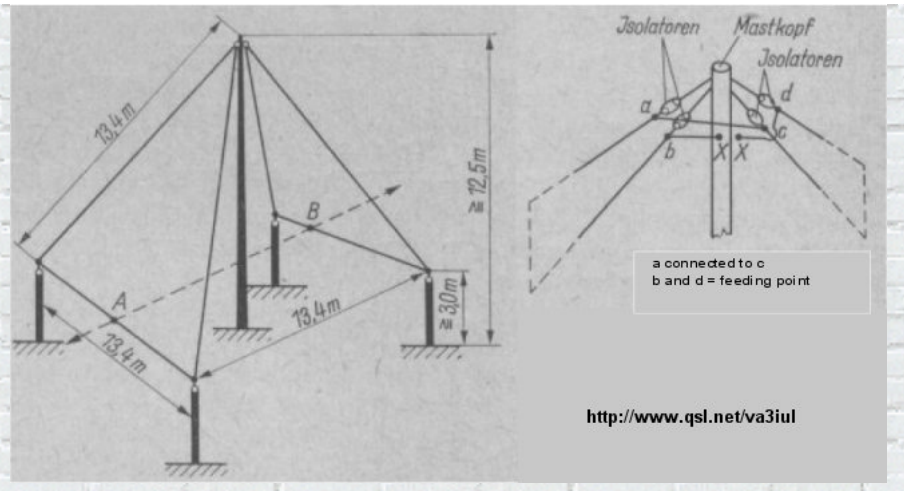

151 - Random Wire Antenna All Bands

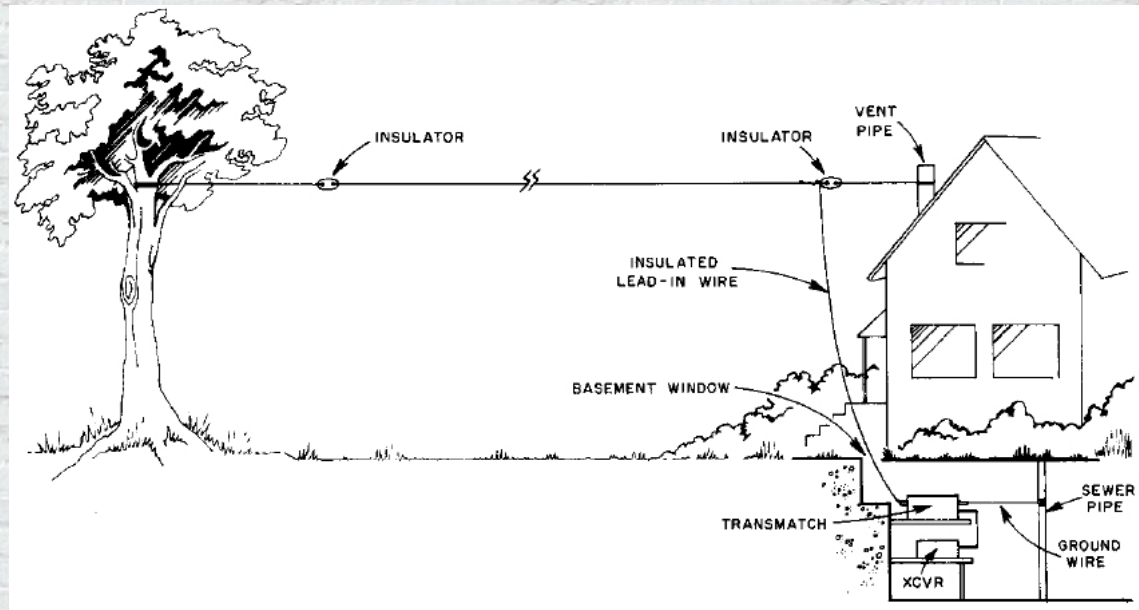

152 - Multiband Dipole Antenna for 80m, 40m,15m, 10m

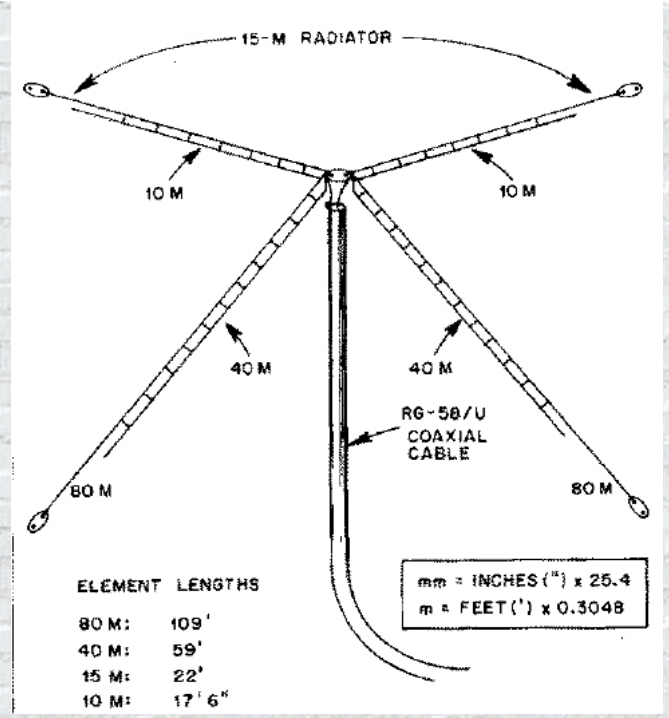

153 - Slim Jim Wire Antenna for 4m

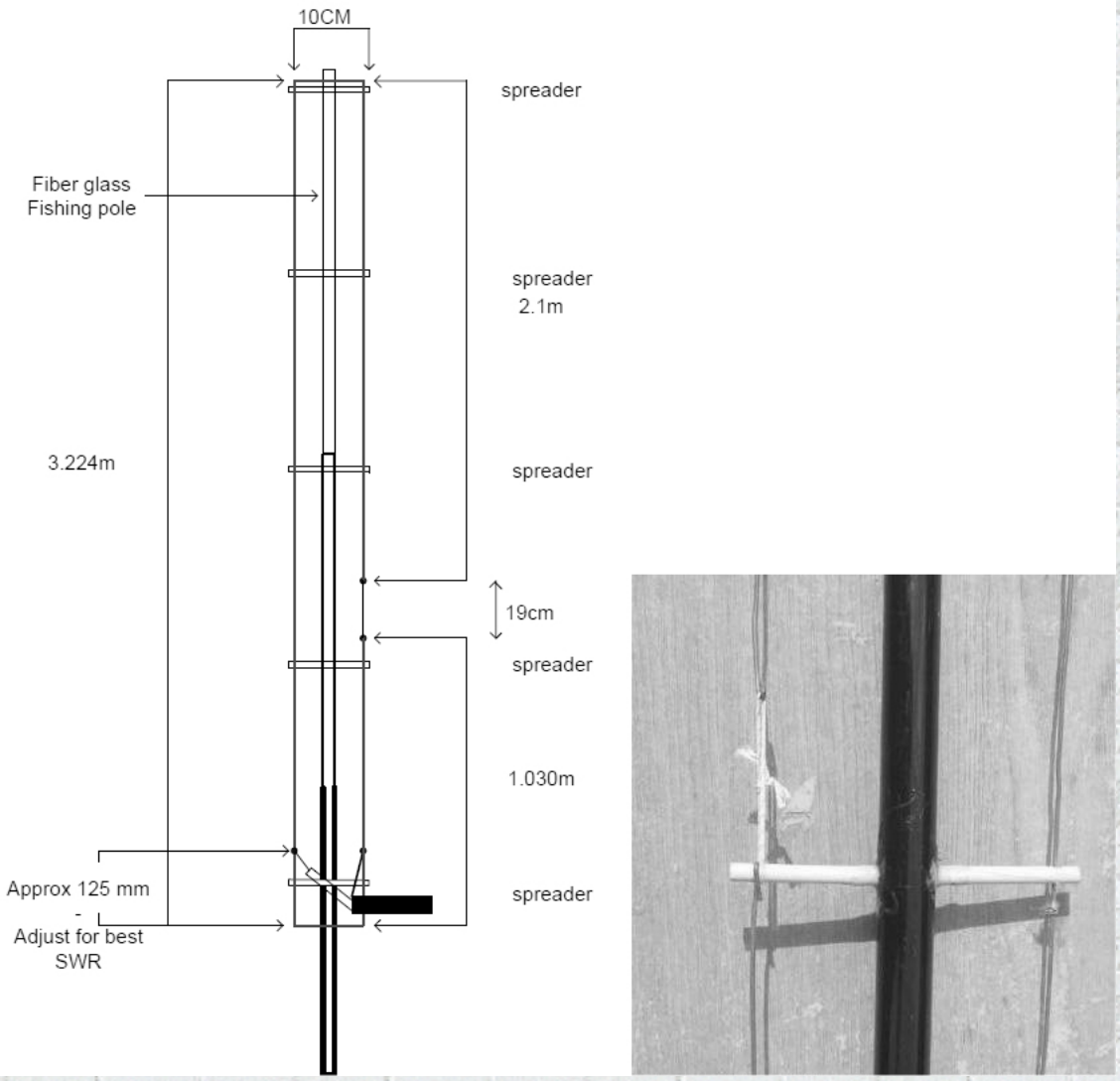

154 - Delta Loop for 6m

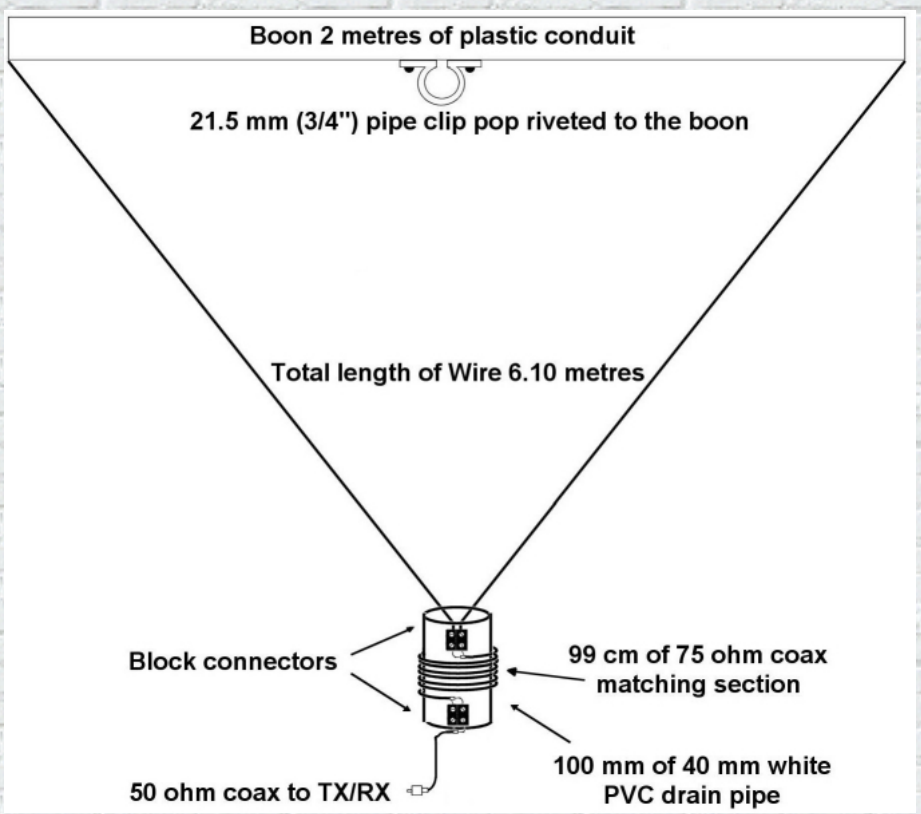

155 - Re-Configurable Antenna for 160m and 80m

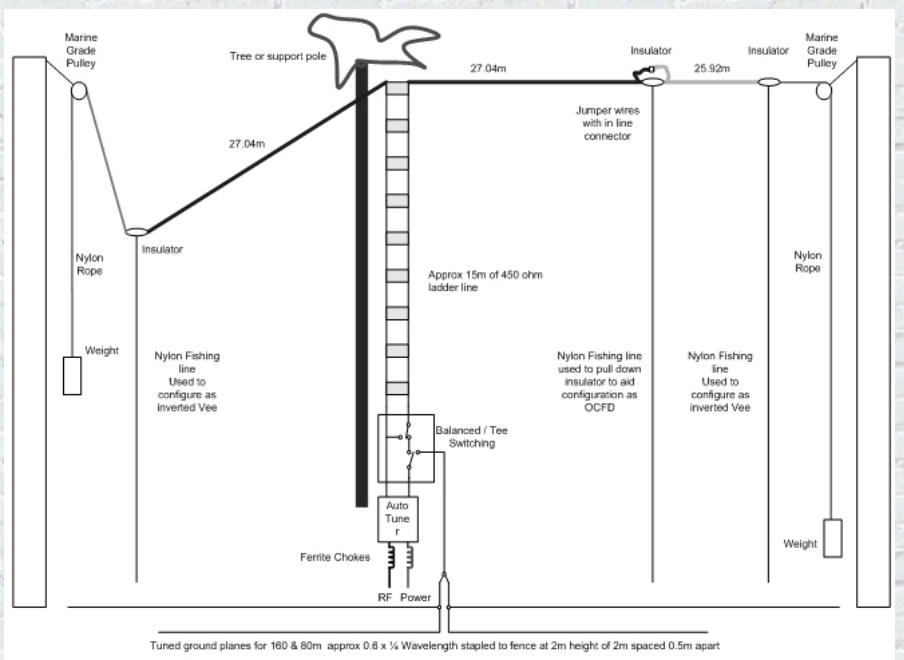

156 - Very Low Frequency Inverted-L Antenna

f(kc)	X (ohms)	CALCULATED Rrad (ohms)
45	-j785	0.49
50	690	0.60
60	555	0.85
70	450	1.20
80	375	1.55
90	320	2.00
100	268	2.40
120	188	3.6
140	125	5.2
160	75	7.2
180	30	9.9
195	0	12.8

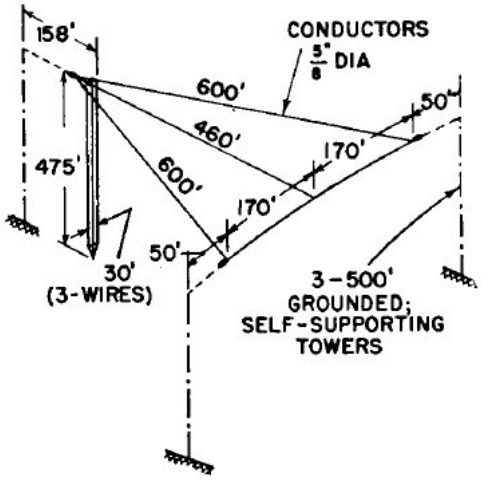

157 - Reduced Size Half Sloper Antenna for 160m

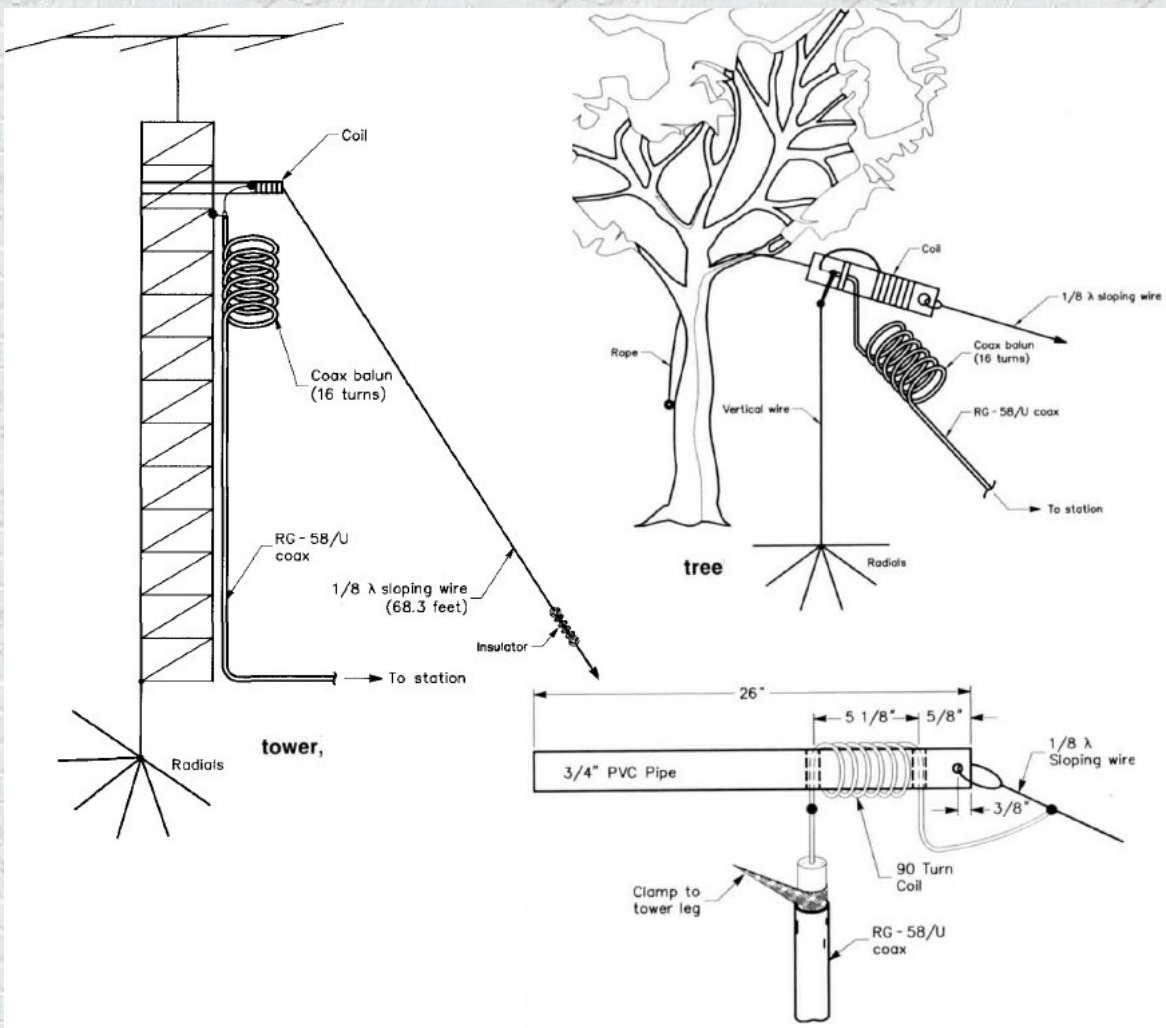

158 - Tree-Mounted HF Antenna

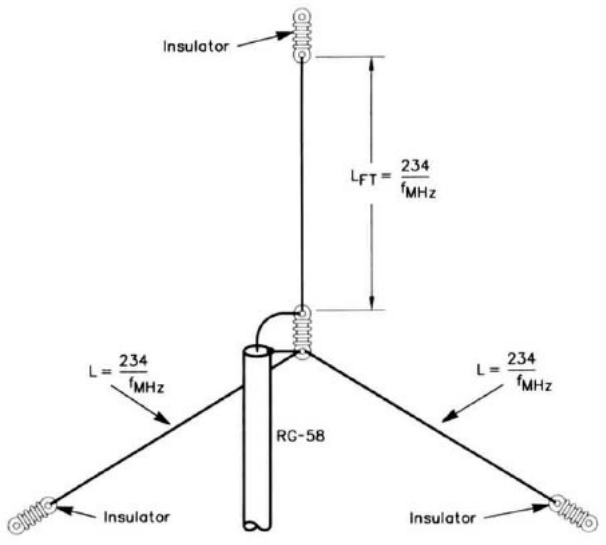

159 - Multiband Vertical Antenna for 80m, 40m, 20m

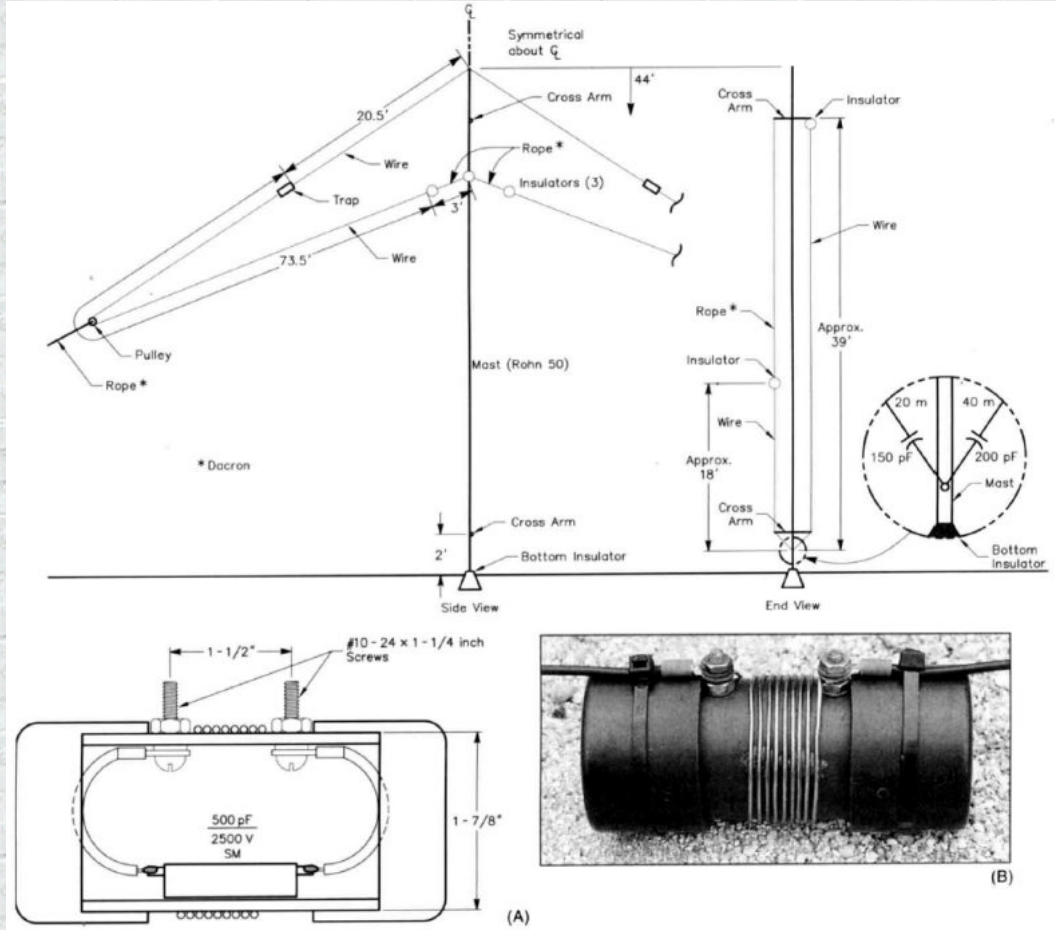

160 - Marconi Antenna for 136 kHz

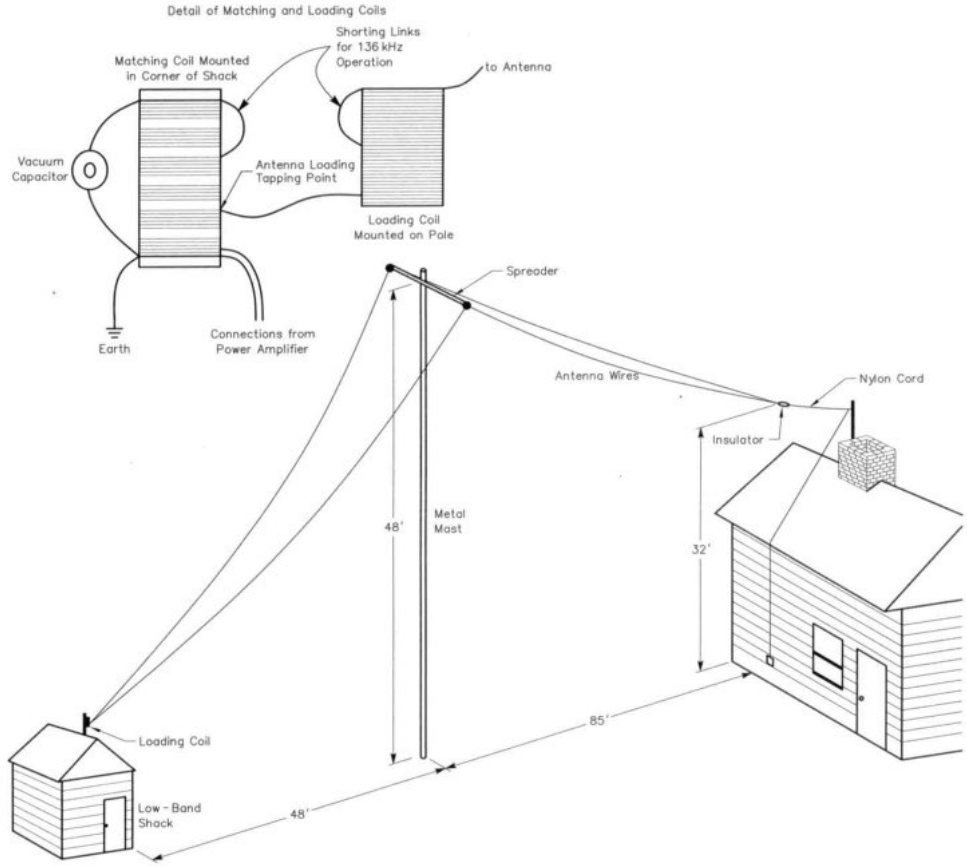

161 - Simple Killer Antenna for 40m

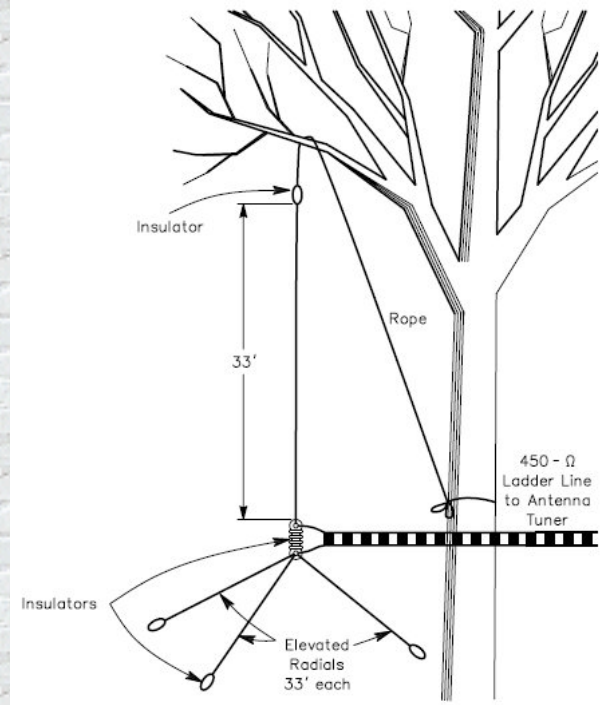

162 - Stub-Directed V Antenna for 80m

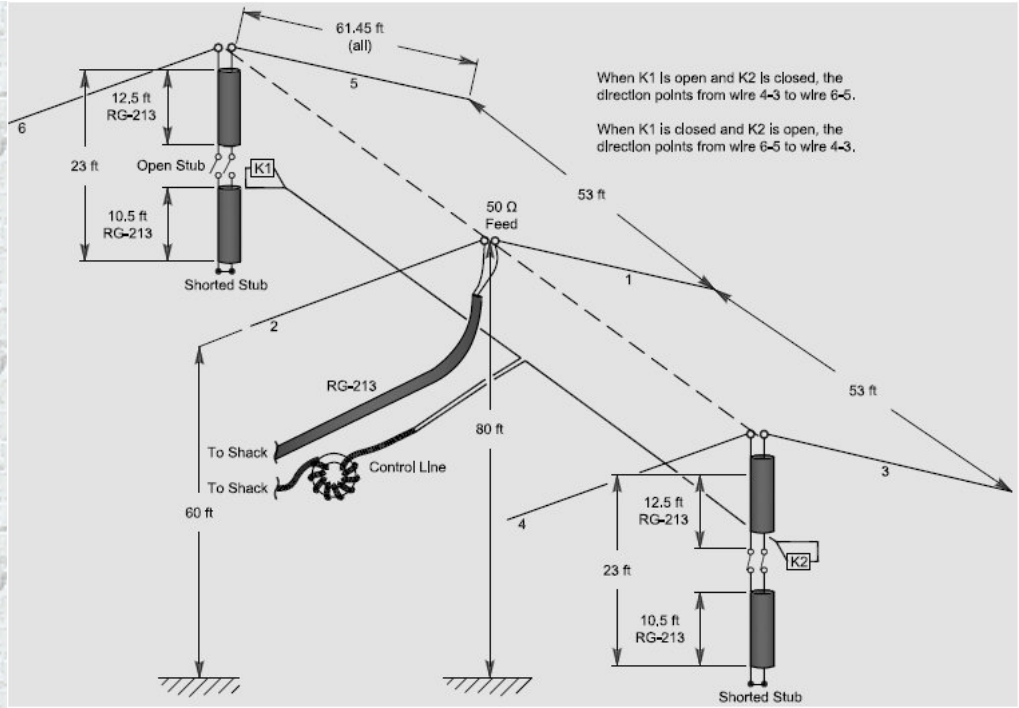

163 - KT0NY Over-and-Under DX Antenna for 20m

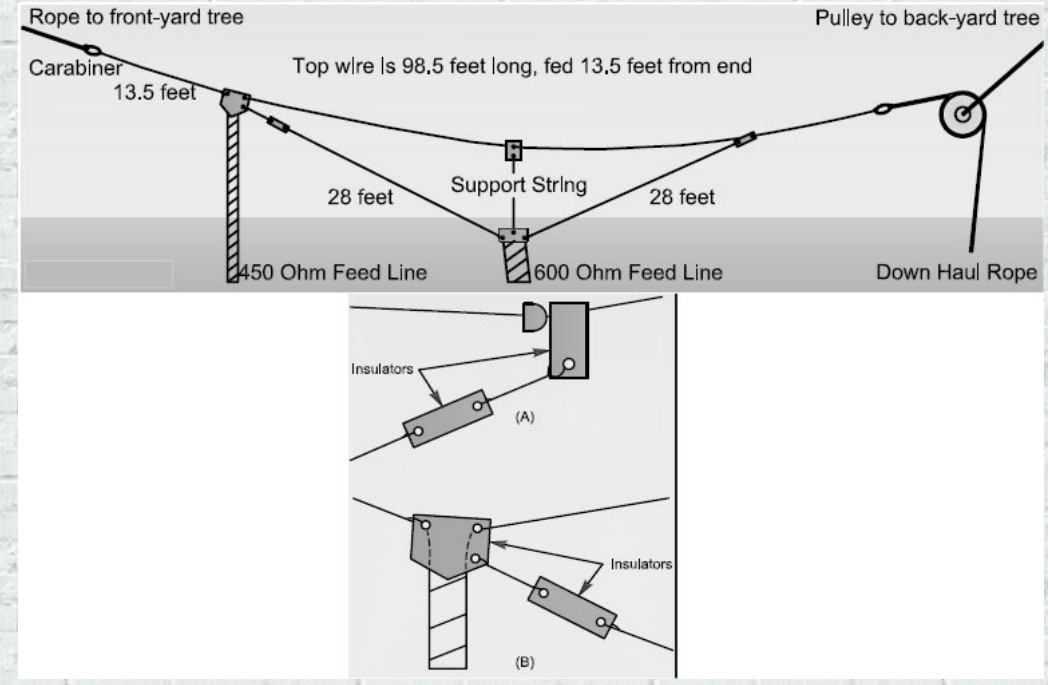

164 - Horizontal Loop Antennas

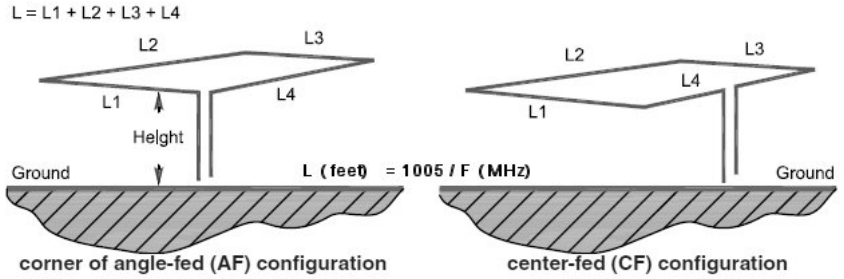

Loop Performance by Shape and Feed Point

	Circular Loop		*Square Loop AF*		*Triangle Loop AF*		*Square Loop CF*		*Triangle Loop CF*	
	Gain (dBi)	*Elev*	*Gain (dBi)*	*Elev*	*Gain (dBi)*	*Elev*	*Gain (dBi)*	*Elev*	*Gain (dBi)*	*Elev*
1.9 MHz	3.93	90°	3.46	90°	2.88	90°	3.70	90°	2.67	90°
3.9 MHz	8.47	90°	8.13	90°	7.76	90°	8.23	90°	8.04	90°
7.2 MHz	7.76	50°	7.35	50°	7.98	45°	7.64	45°	7.30	45°
10.1 MHz	8.34	35°	10.68	35°	7.35	30°	8.17	35°	7.24	30°
14.2 MHz	10.44	25°	12.50	25°	11.27	25°	10.25	25°	8.50	25°
18.1 MHz	11.18	20°	14.03	20°	12.32	20°	11.40	20°	8.84	20°
21.2 MHz	10.16	15°	14.55	15°	12.42	15°	11.28	15°	8.29	15°
24.9 MHz	10.77	15°	13.69	15°	14.09	15°	10.58	15°	10.10	15°
28.5 MHz	11.39	15°	12.85	10°	13.84	10°	11.19	10°	12.66	10°

165 - Ribbon J-Pole for 2m

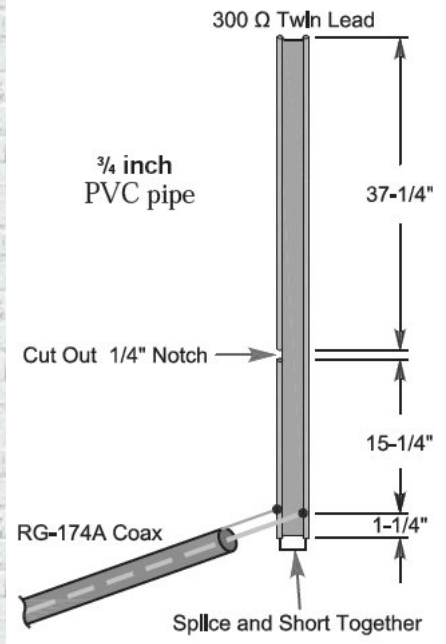

166 - Dual Band Ribbon J-Pole for 2m, 70cm

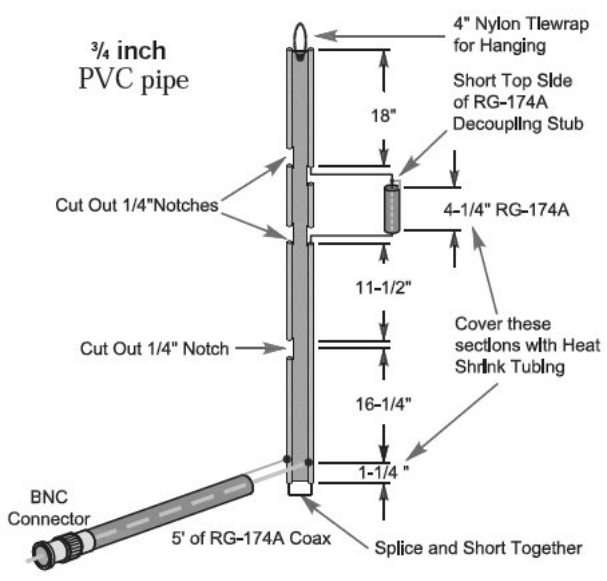

167 - Square Vertical Loop Antenna for 40m

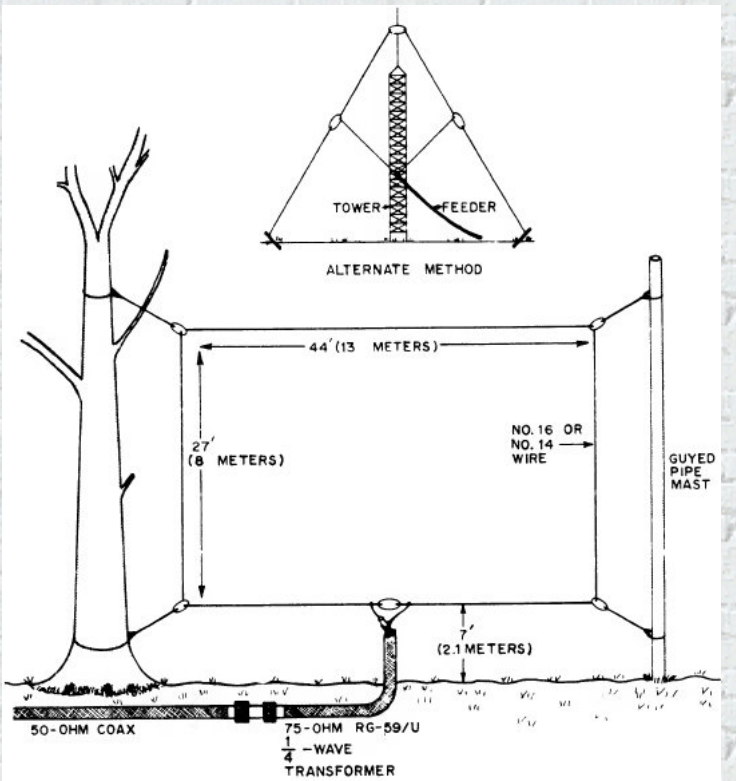

168 - Tri-Band Quad Antenna for 20m, 15m, 10m

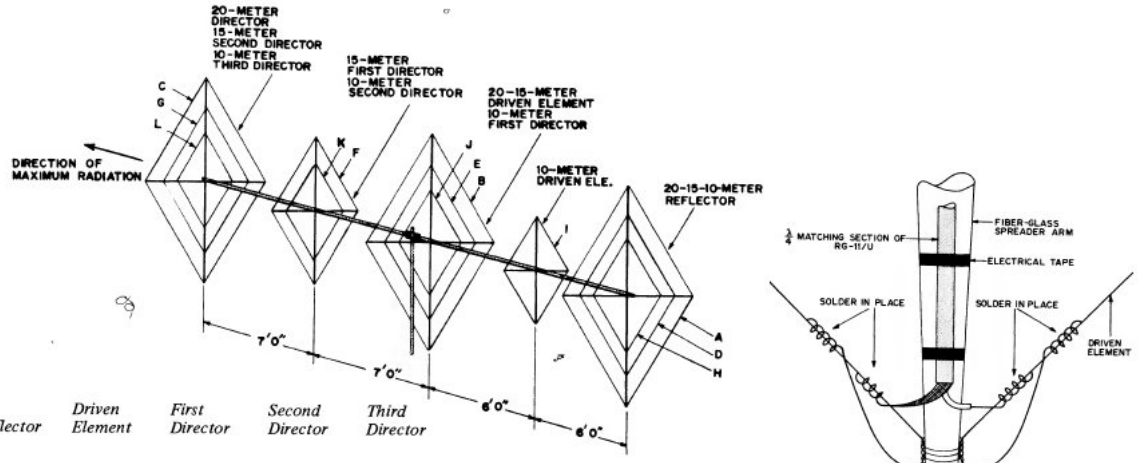

Band	Reflector	Driven Element	First Director	Second Director	Third Director
20 Meters	(A) 72' 8"	(B) 71' 3"	(C) 69' 6"	–	–
15 Meters	(D) 48' 6½"	(E) 47' 7½"	(F) 46' 5"	(G) 46' 5"	–
10 Meters	(H) 36' 2½"	(I) 35' 6"	(J) 34' 7"	(K) 34' 7"	(L) 34' 7"

169 - 3D Quad Antenna for 80m, 40m, 20m, 15m, 10m

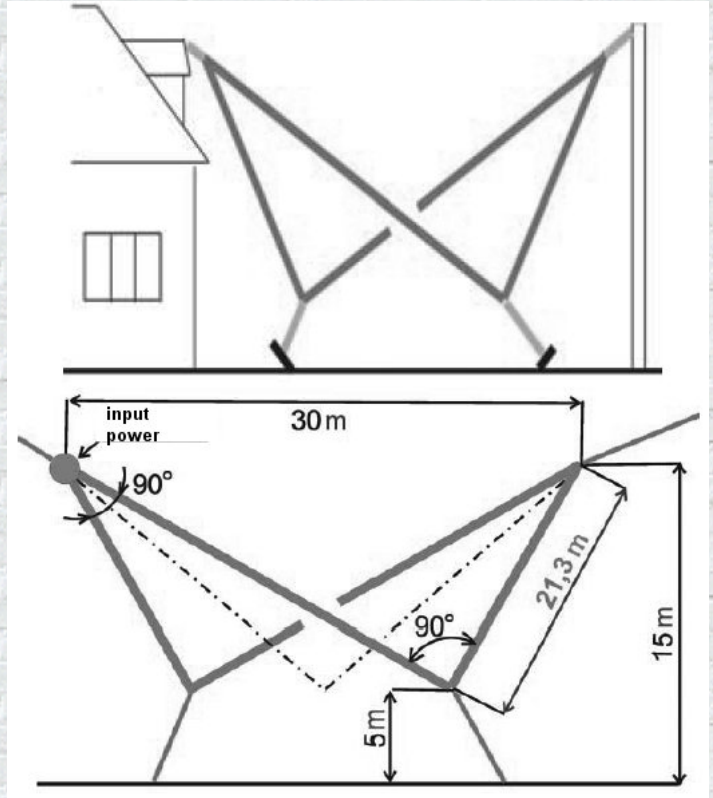

170 - Sloping Wire Antenna for 30m, 20m, 17m, 15m, 12m, 10m

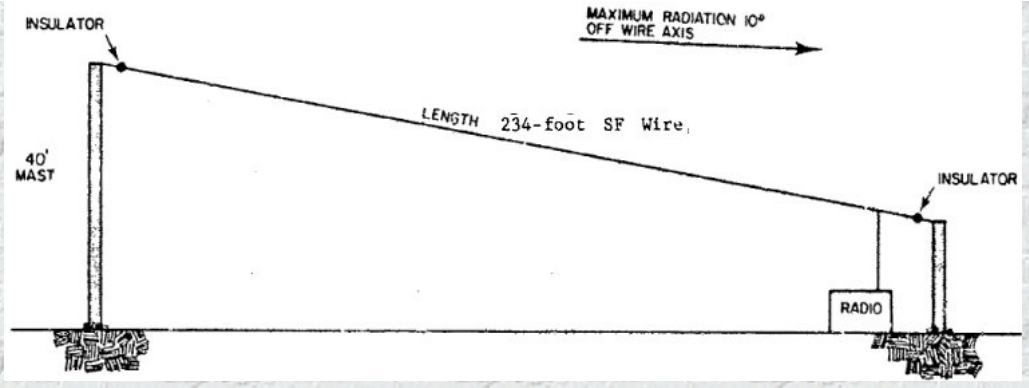

171 - Broadband Dipole Antenna with Coaxial Resonator for 80m

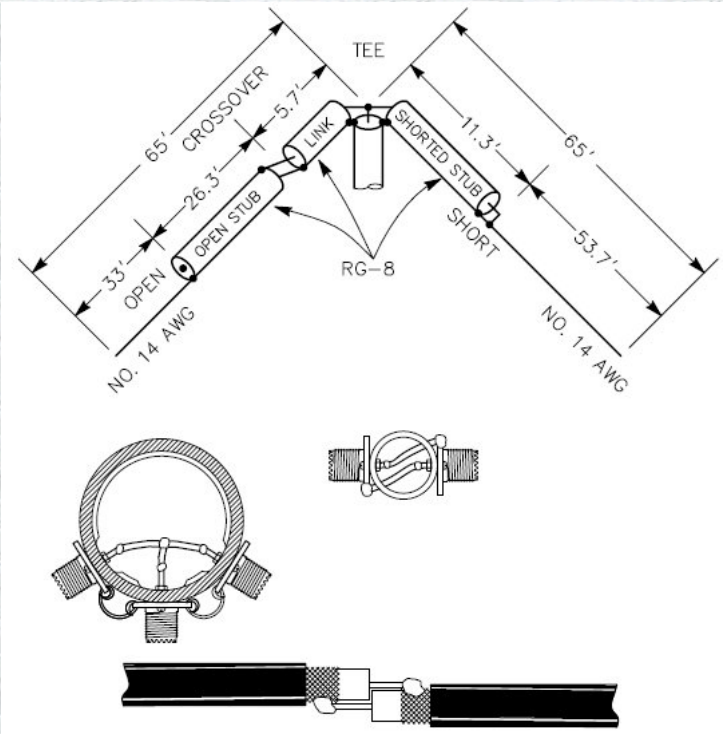

172 - Resonant Feedline Dipole Antenna for 80m

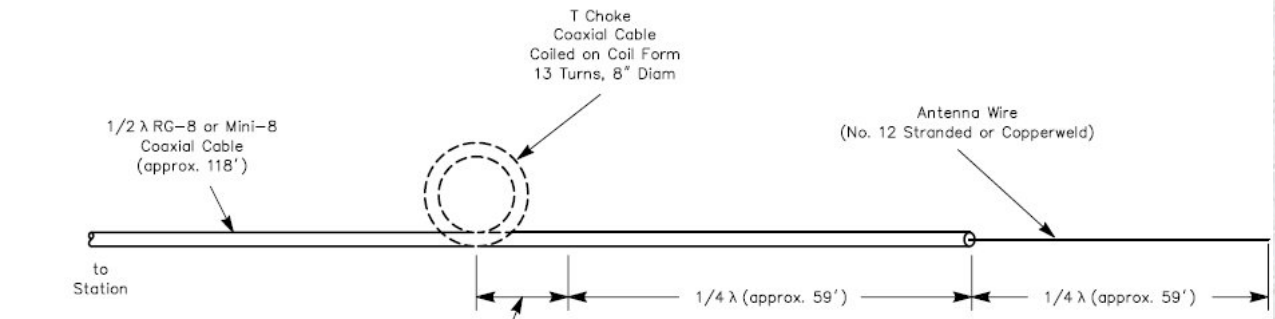

Choke Dimensions for RFD Antenna

Freq	*RG-213, RG-8*	*RG-58*
3.5	22 ft, 8 turns	20 ft, 6-8 turns
7	22 ft, 10 turns	15 ft, 6 turns
10	12 ft, 10 turns	10 ft, 7 turns
14	10 ft, 4 turns	8 ft, 8 turns
21	8 ft, 6-8 turns	6 ft, 8 turns
28	6 ft, 6-8 turns	4 ft, 6-8 turns

173 - Dual-Band Loading Wire Antenna for 80m, 30m

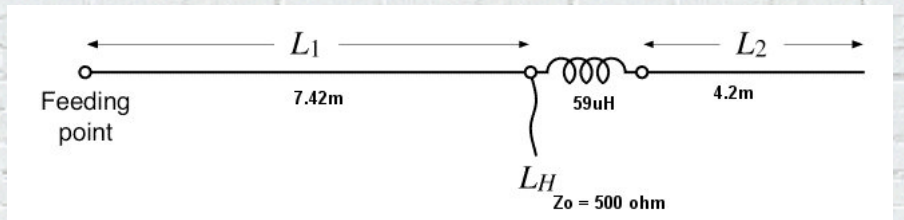

174 - Stub Matching Antennas

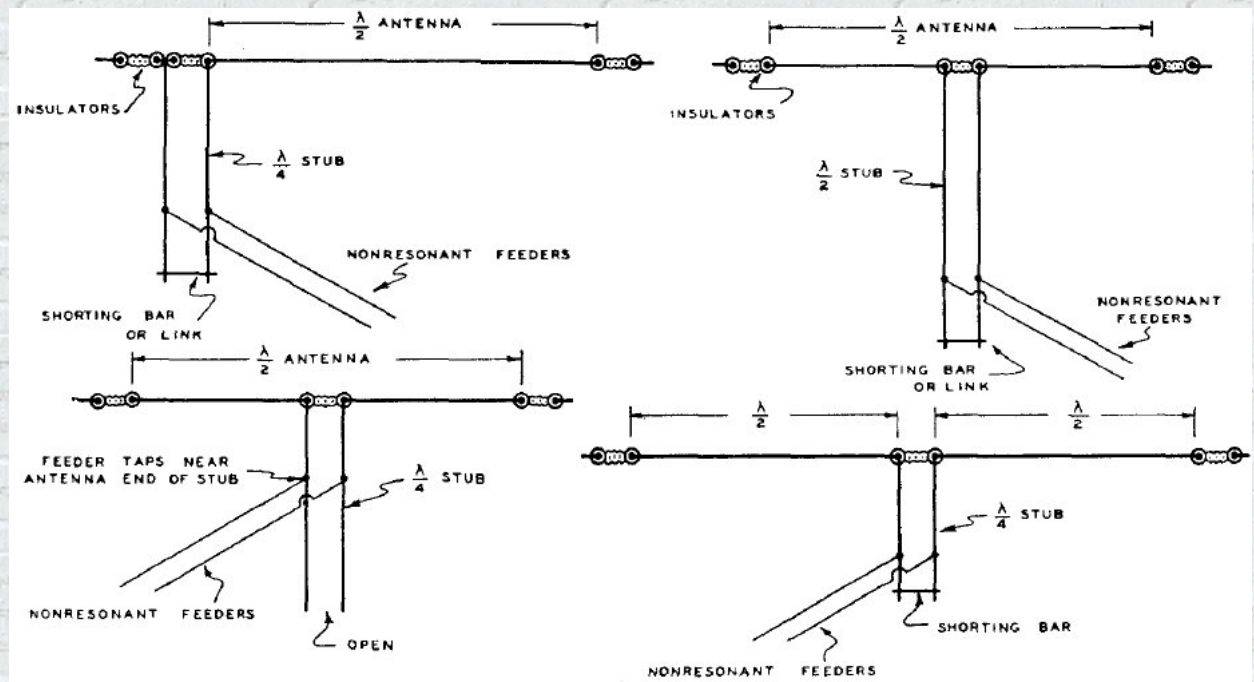

175 - J-Style Vertical Wire Antenna for 10m

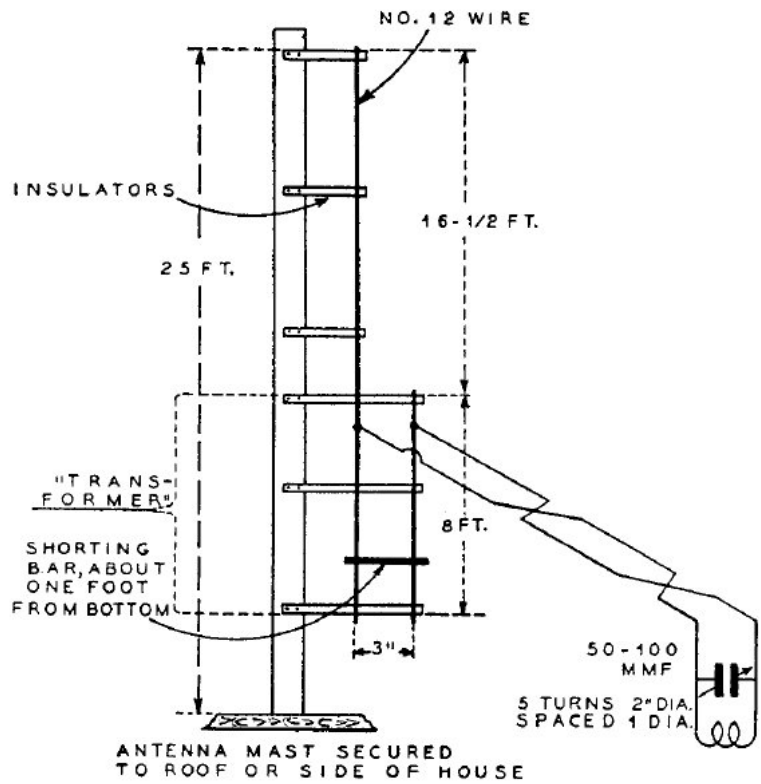

176 - Dual Band Vertical with Zepp Feeders for 40m, 20m

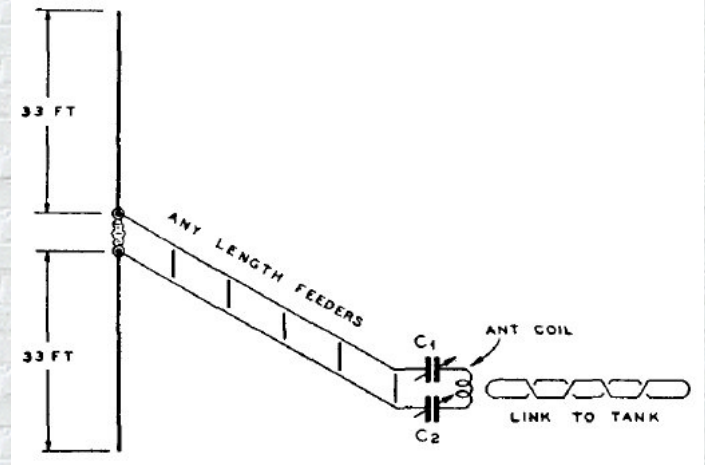

177 - RCA Double Doublet for 40m to 12m

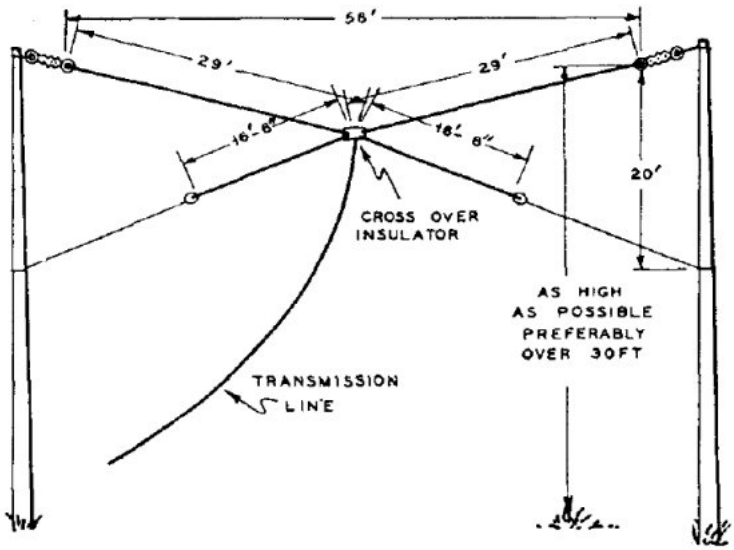

178 - RCA Spiderweb Antenna for 40m to 6m

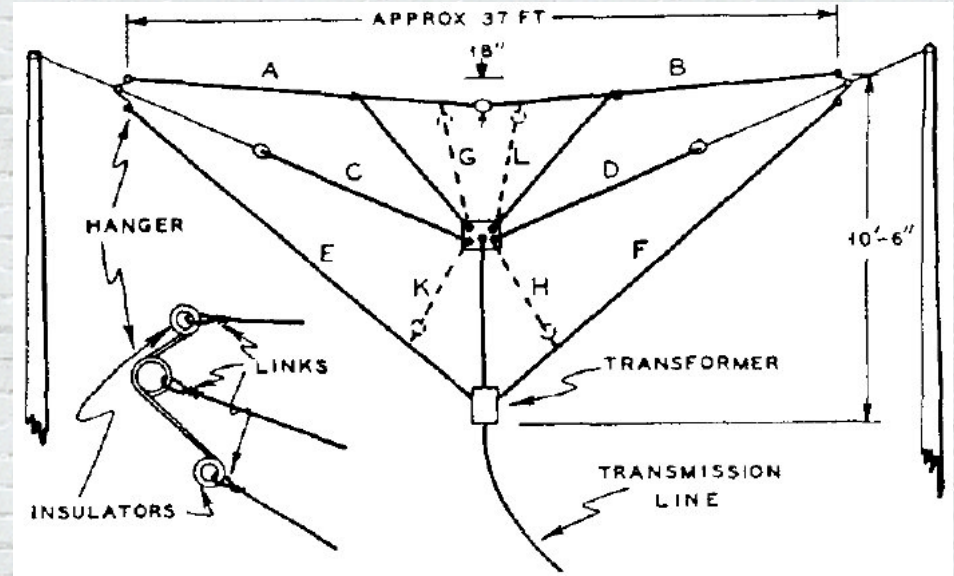

179 - Folded Dipole with Shorted Straps

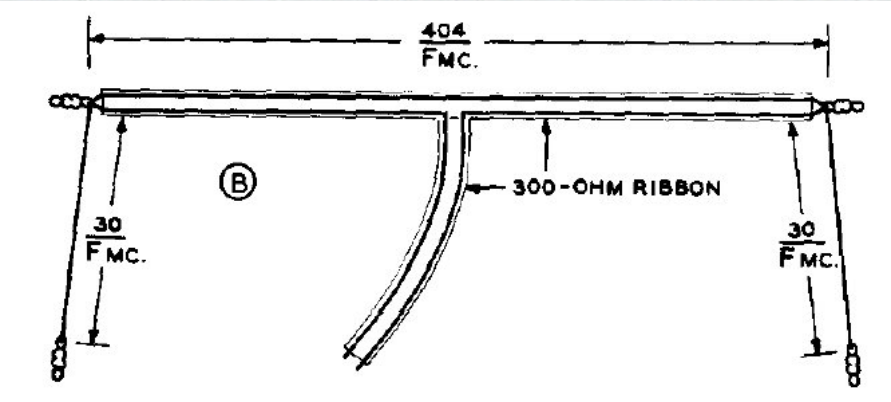

180 - Twin-Lead Marconi Antenna for 160m, 80m

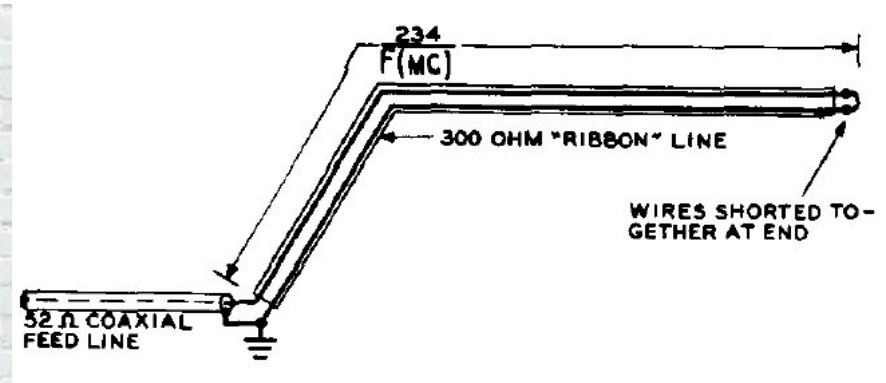

181 - Broadband Antenna Quarter-Wave Balun for 80m

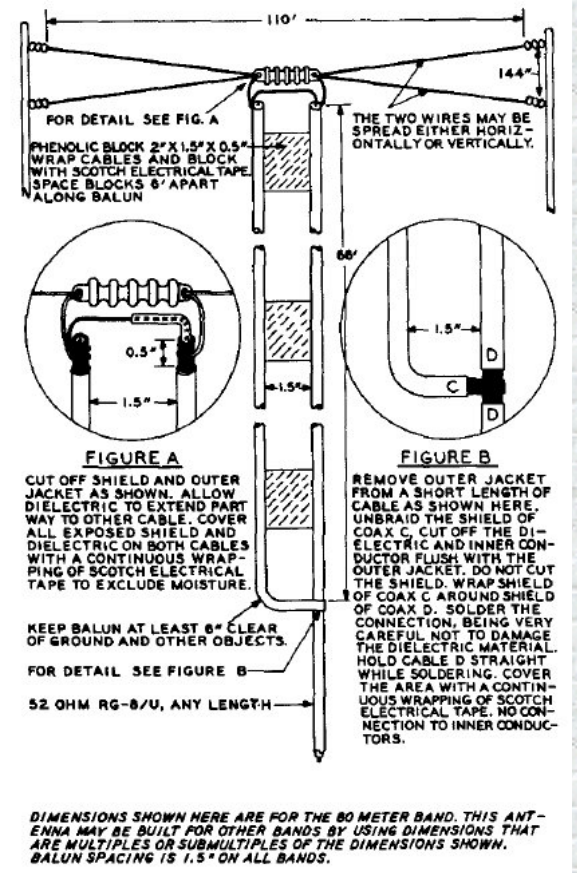

182 - Three-Quarter-Wave Folded Doublet for Dual-Band

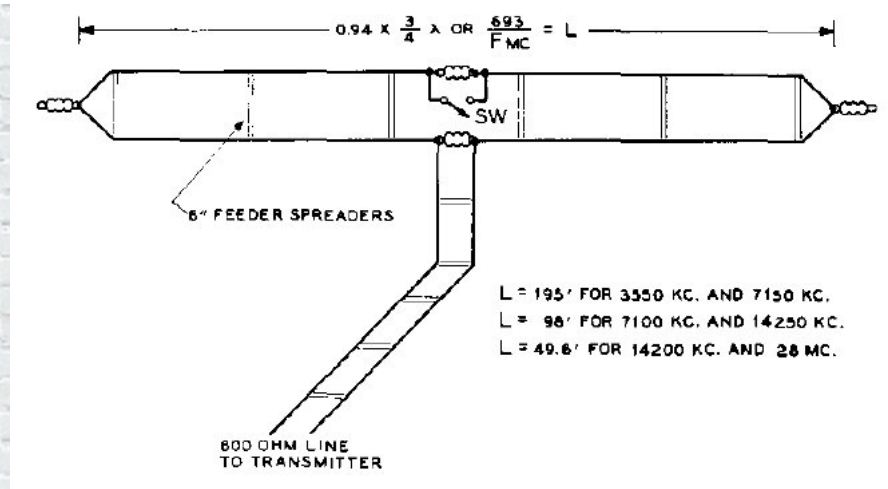

183 - Three-Quarter-Wave Folded Doublet No-Switch for Dual-Band

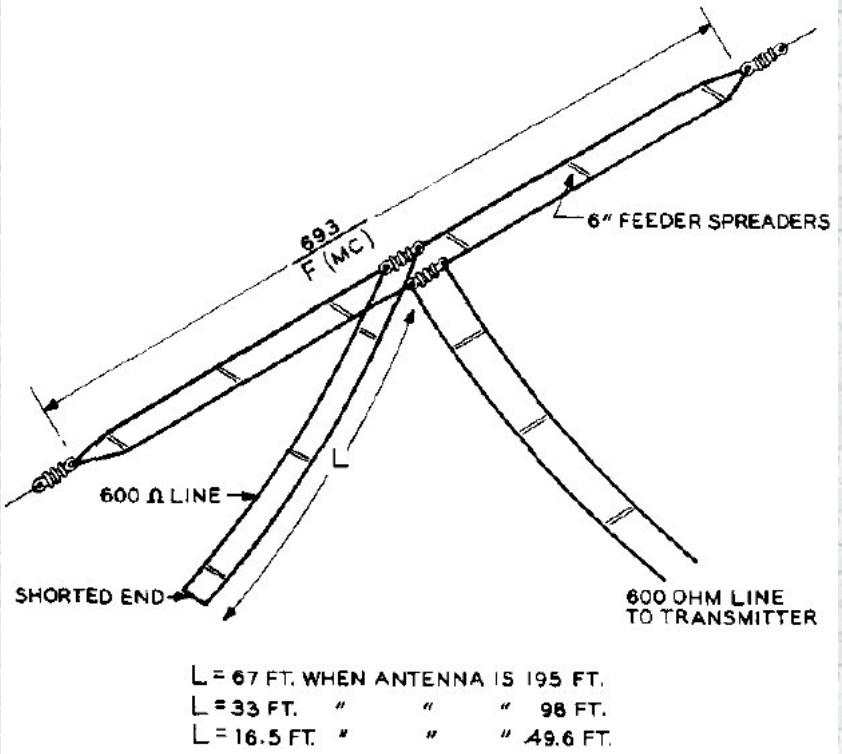

184 - Wideband Omni-Directional Discone Antenna

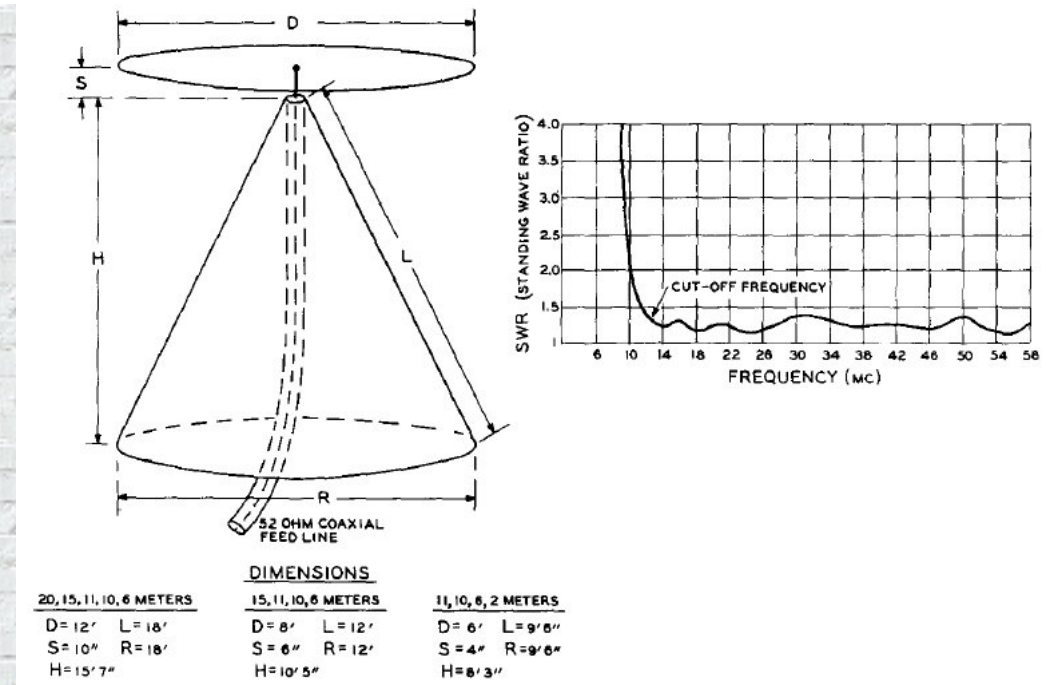

185 - Wideband Rhombic Antenna for 40m to 10m

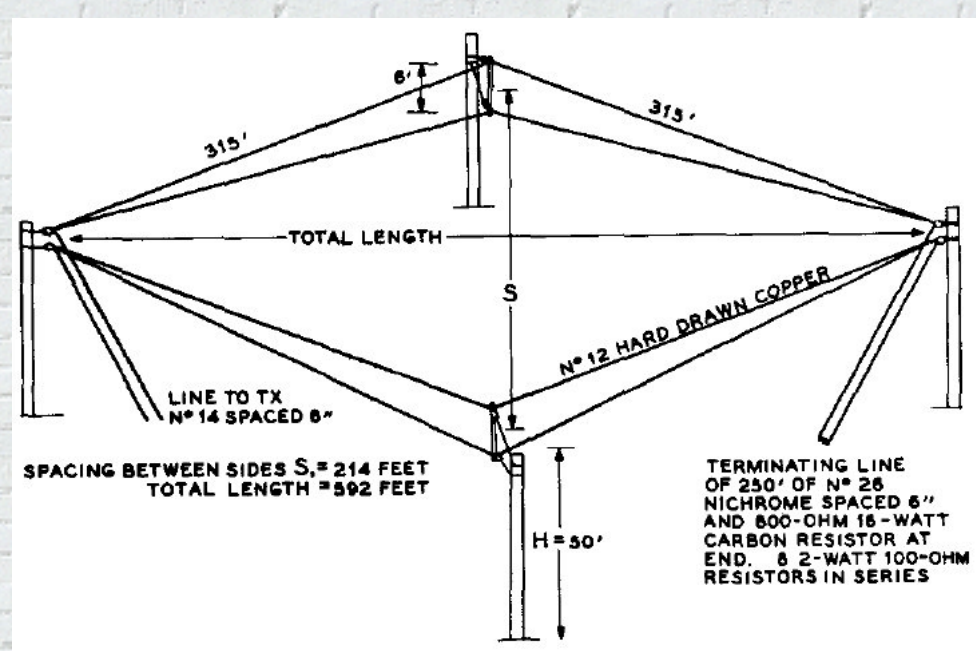

186 - Pre-Cut Linear Array Antenna 3dB-Gain for 40m

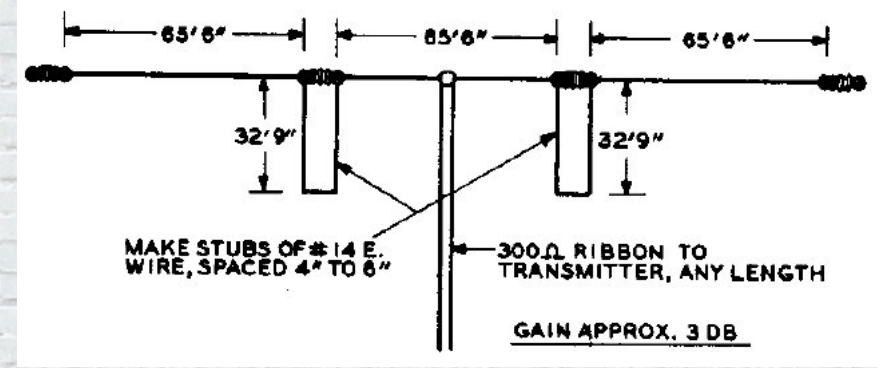

187 - X-Array Antenna 6dB-Gain for 20m, 15m, 10m

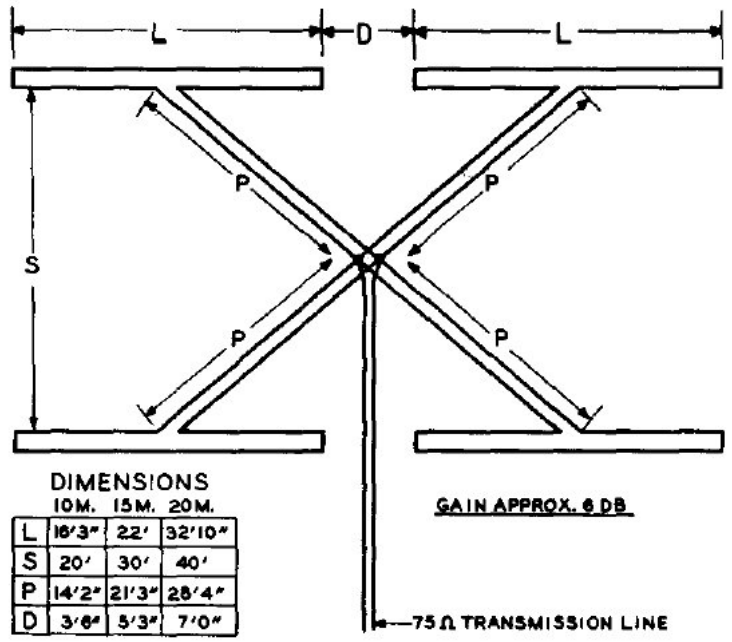

	10M.	15M.	20M.
L	16'3"	22'	32'10"
S	20'	30'	40'
P	14'2"	21'3"	28'4"
D	3'6"	5'3"	7'0"

The entire array (with the exception of the 75-ohm feed line) is constructed of 300-ohm ribbon line. Be sure phasing lines (P) are poled correctly, as shown.

188 - Double-Bruce Array Antenna 5dB-Gain for 20m, 10m

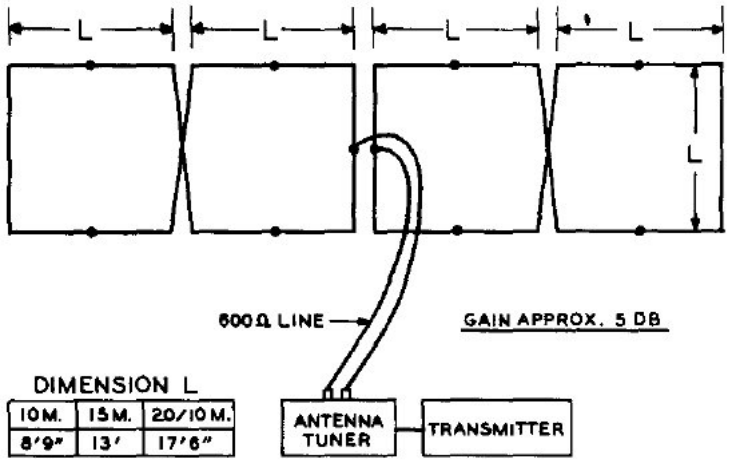

10M.	15M.	20/10M.
8'9"	13'	17'6"

189 - Bi-Square Broadside Array 4dB-Gain for 20m, 15m, 10m

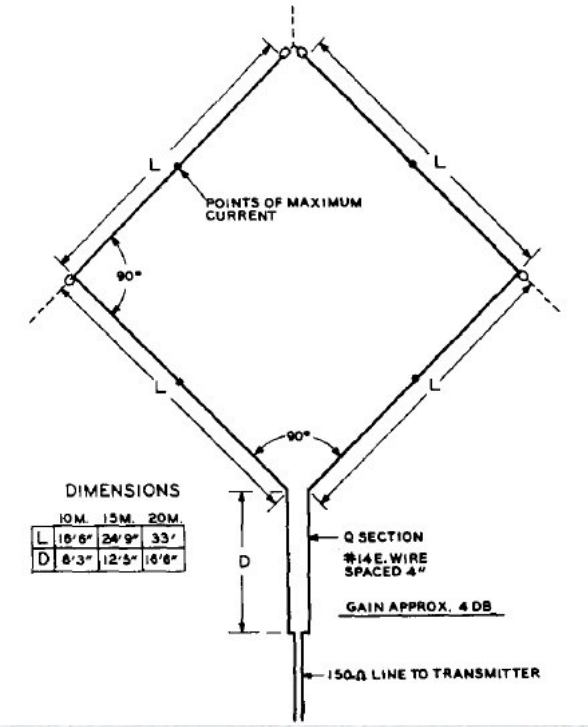

190 - Six-Shooter Broadside Array 7.5dB-Gain for 20m, 15m, 10m

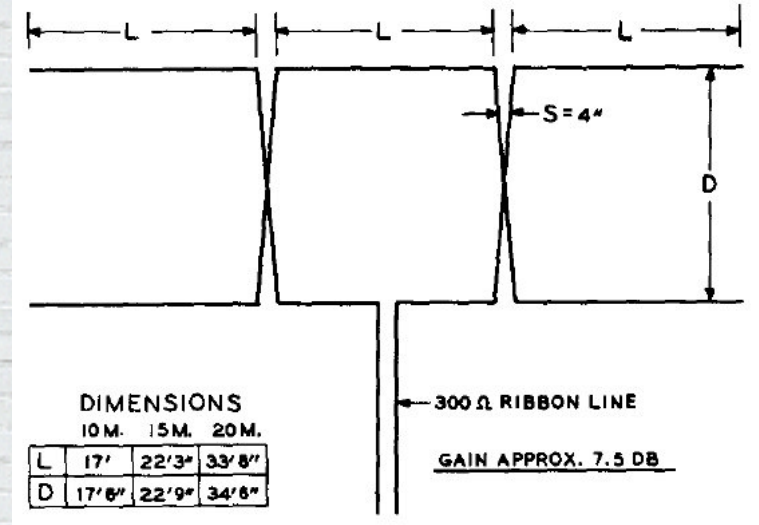

191 - Triplex Flat-Top Beam 4.5dB-Gain for 20m, 15m, 10m

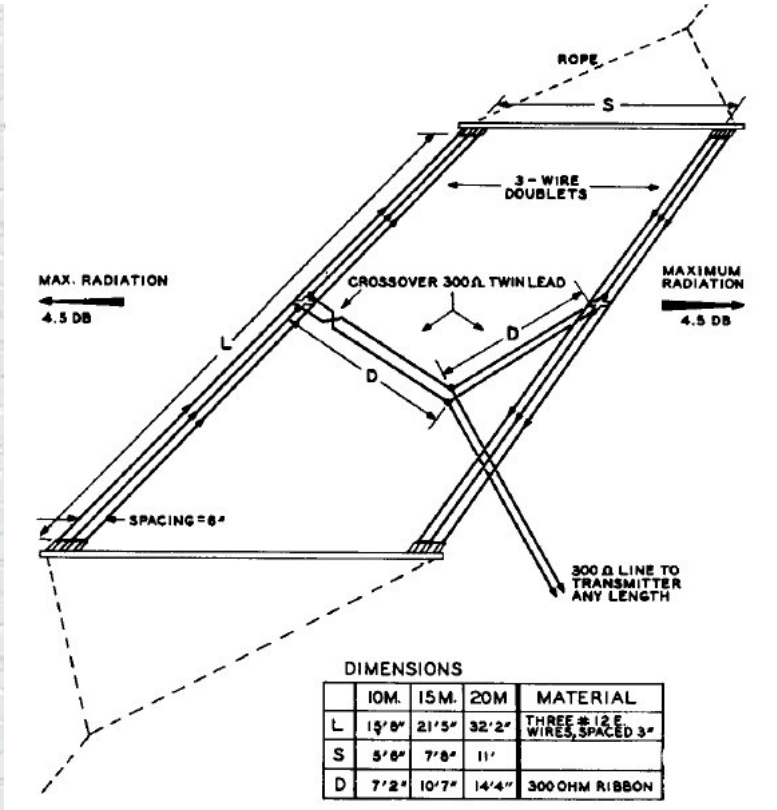

DIMENSIONS

	10M.	15M.	20M	MATERIAL
L	15'8"	21'5"	32'2"	THREE # 12 E. WIRES, SPACED 3"
S	5'8"	7'8"	11'	
D	7'2"	10'7"	14'4"	300 OHM RIBBON

192 - Dual-Band Tilt Antenna for 20m, 10m

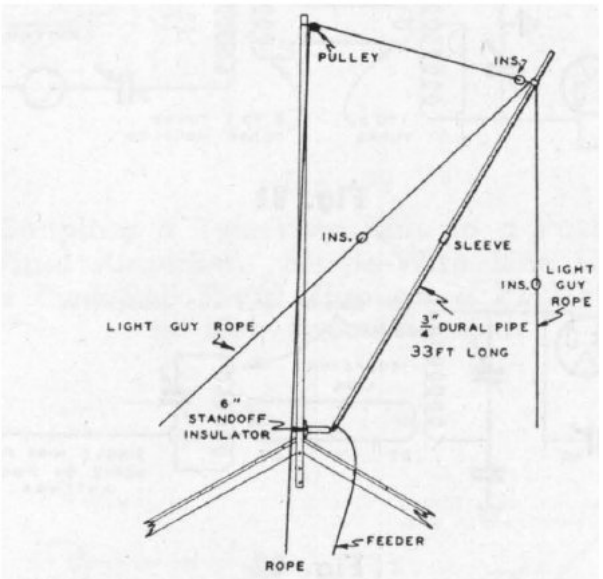

TWO BAND (10-20 METER) TILT ANTENNA — VERTICAL FOR 20 METERS – TILT 54° FROM HORIZON FOR 10 METERS

193 - Super Space Multiband Dipole Antenna for 80m to 10m

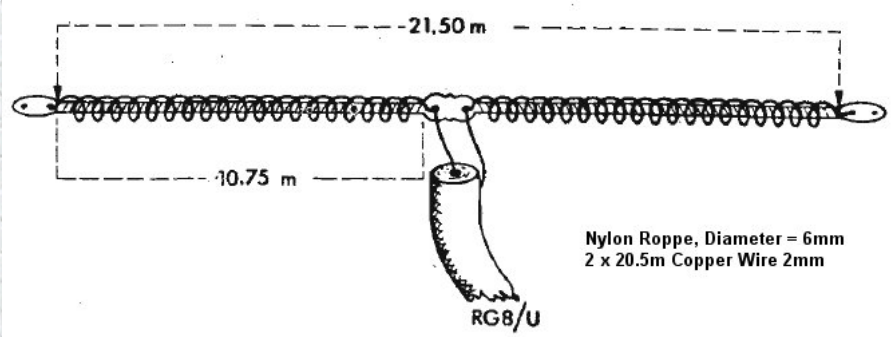

194 - Bi-Square Beam Antenna Gain=5.5dB for 10m

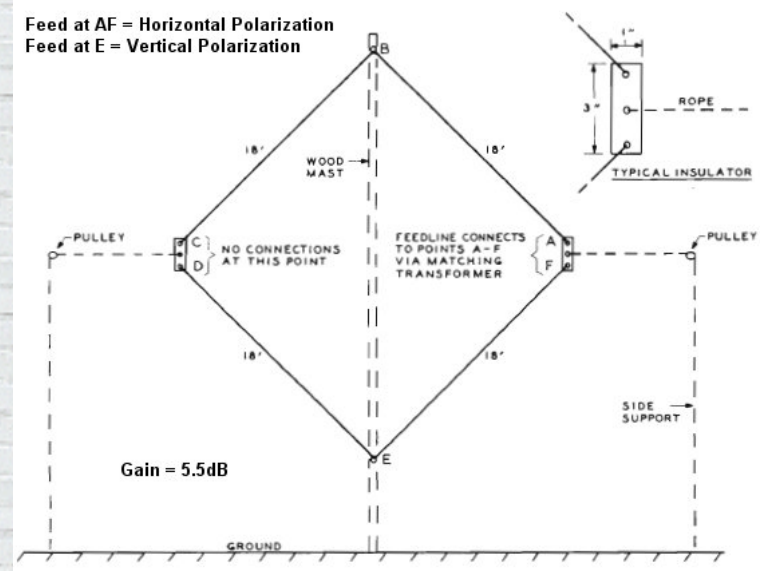

195 - Cousin of G5RV Multiband Antenna for 40m to 10m

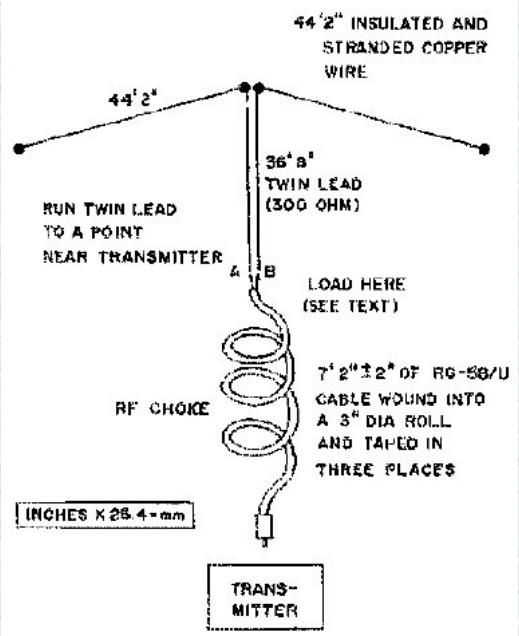

196 - Cayman Quad Antenna for 20m

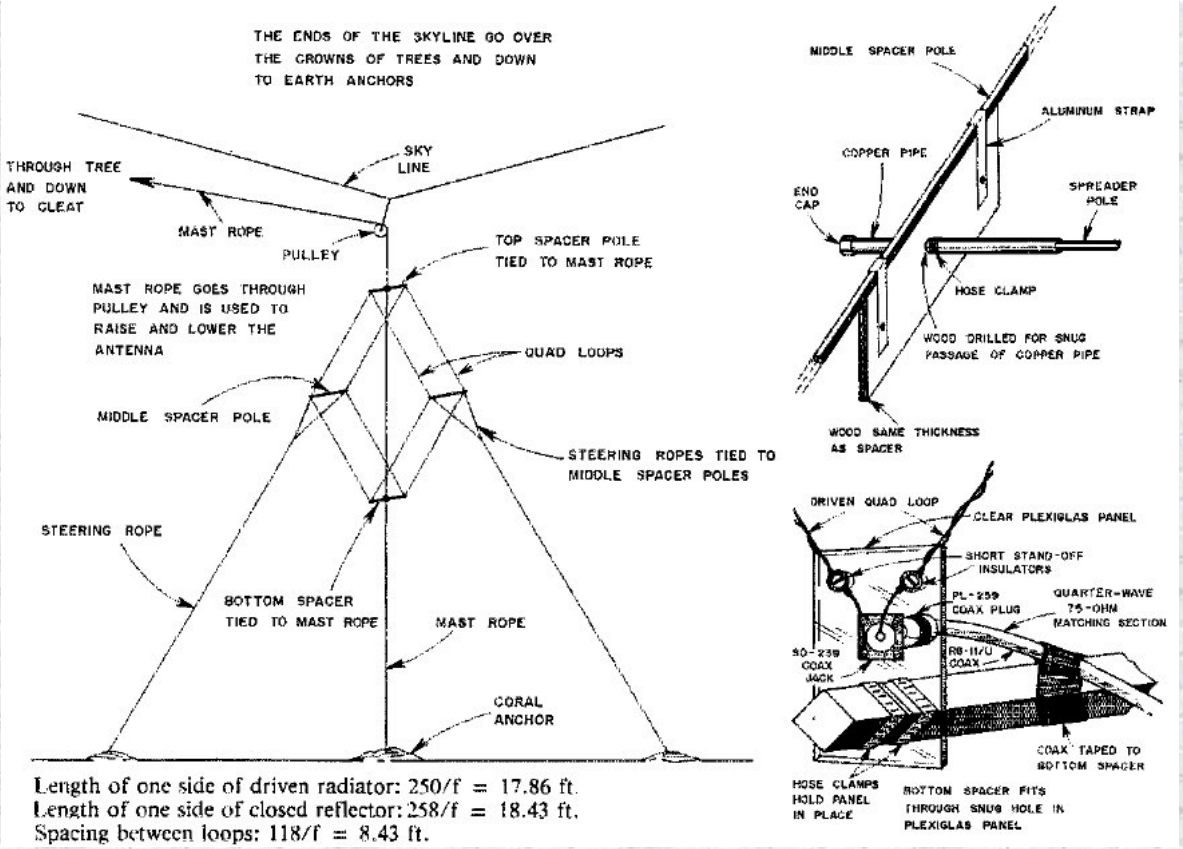

197 - Hentenna Gain=3dB with Bazooka Match for 6m

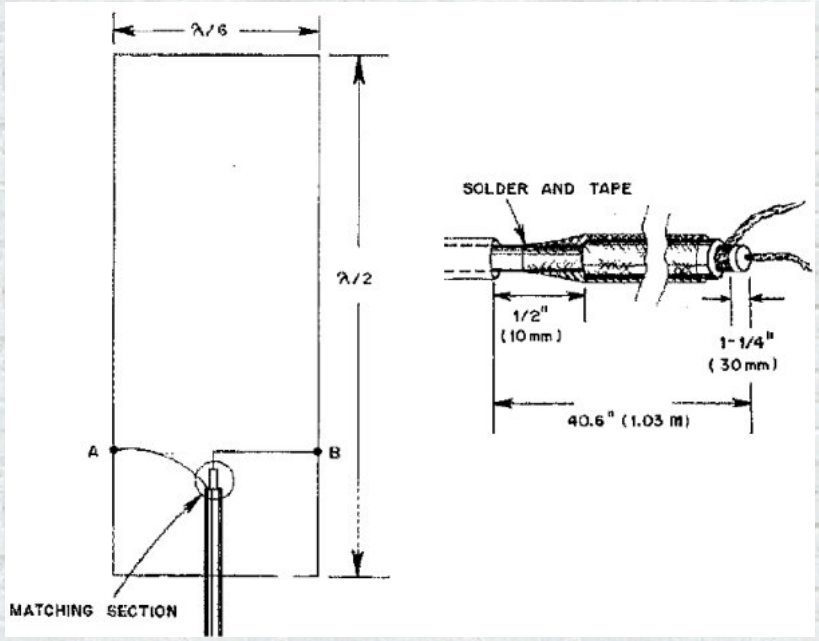

198 - X-Beam Antenna Gain=3dB for 20m

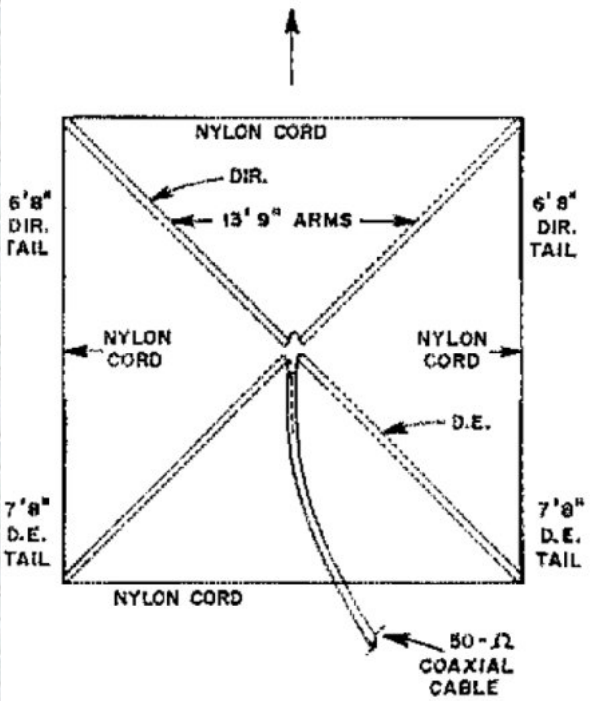

199 - Twin Delta Loop Antenna Gain=6dB for 160m, 80m, 40m

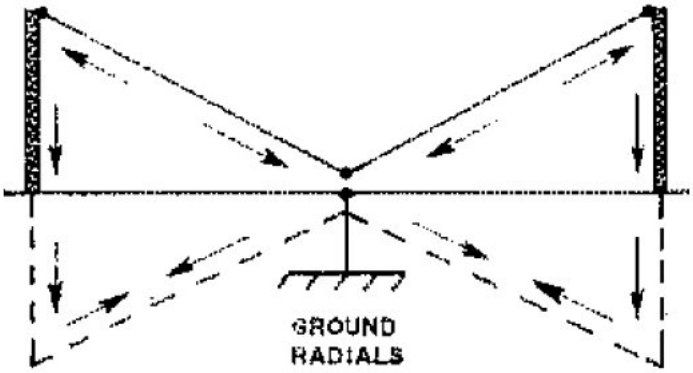

Twin- Delta Loop, with the image in the ground plane.

Band	*Tower Height (ft)*	*Length of Sloping Wires (ft)*
160 m†	102.03	204.06
80 m	49.86	99.72
40 m	25.92	51.84

200 - Inverted-V Beam Antenna for 30m

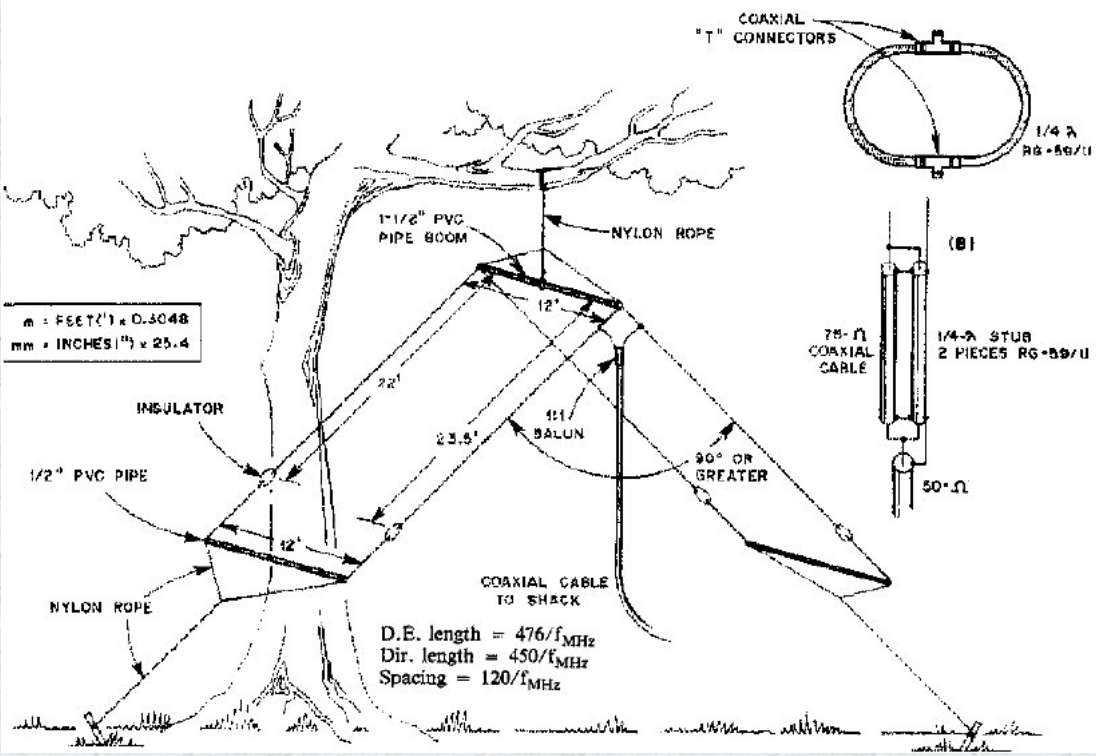

201 - FD4 Windom Antenna for 80m, 40m, 20m, 10m

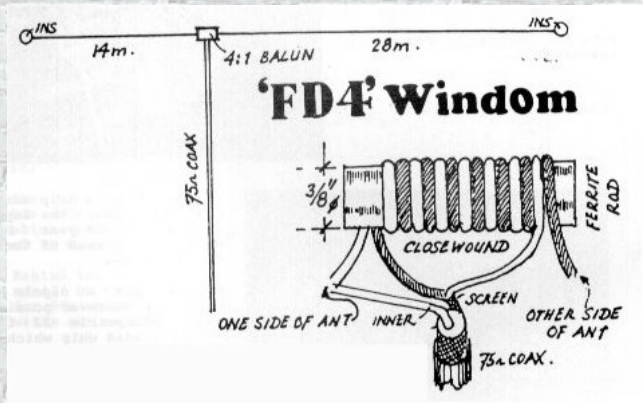

202 - Two Elements Phased Delta Loop for 40m

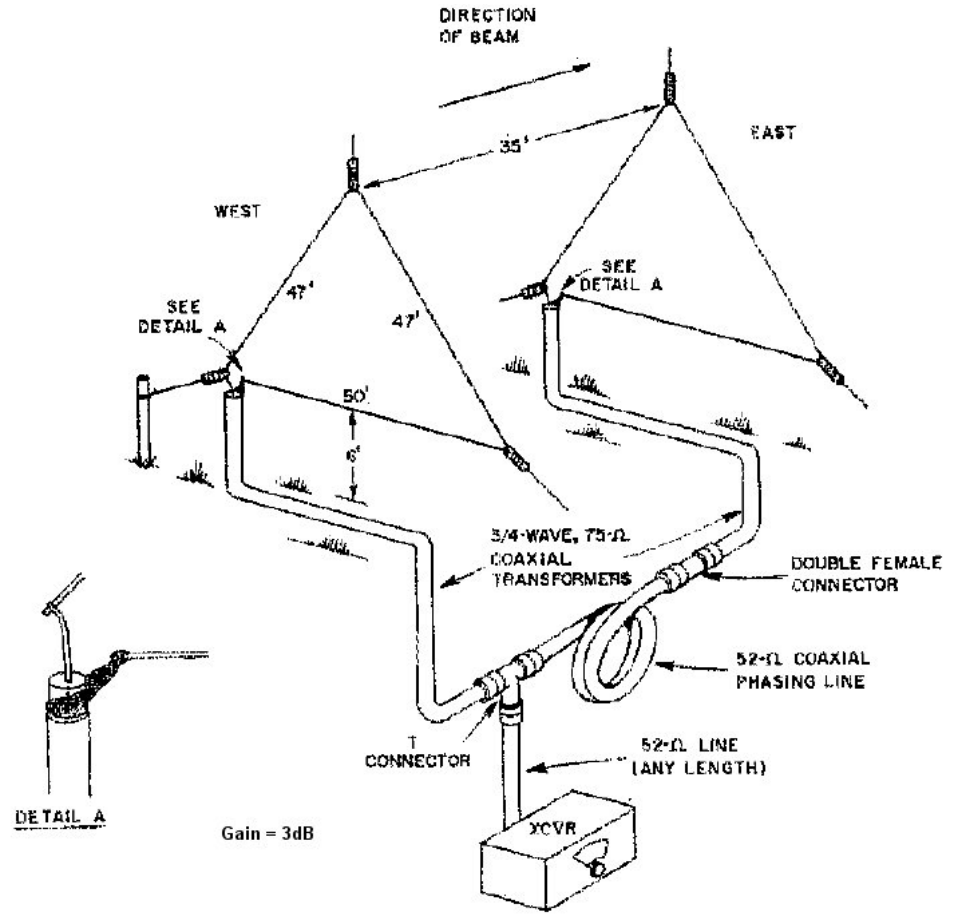

203 - Three Elements Wire Yagi for 10m

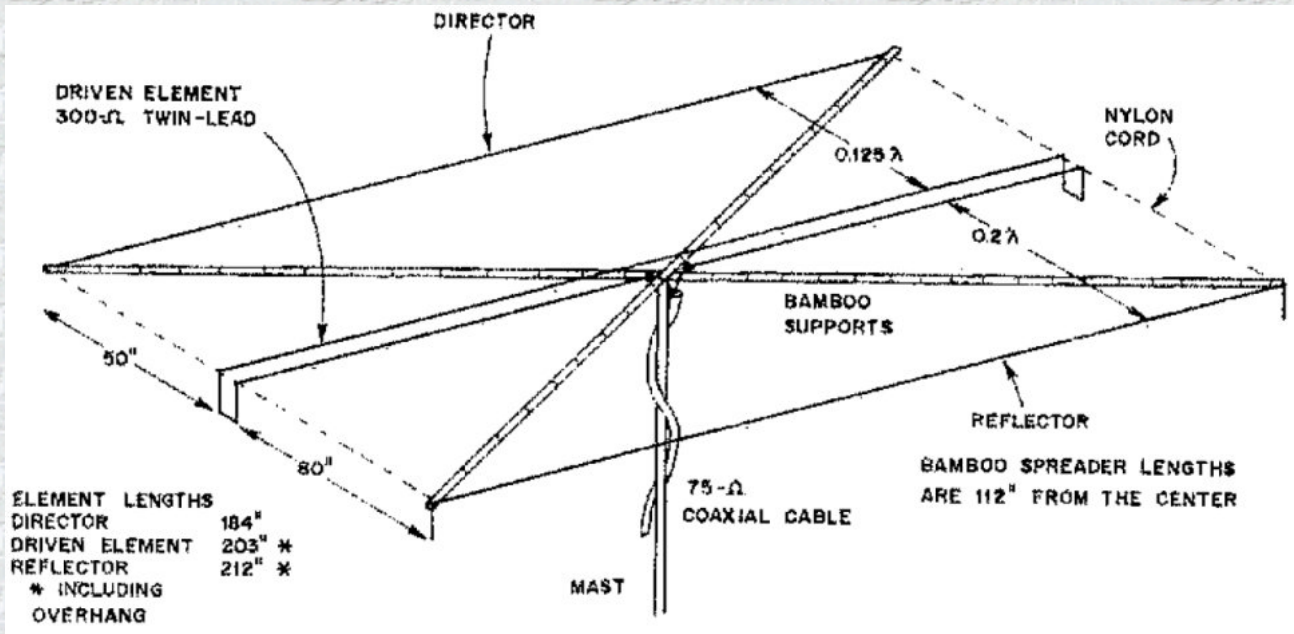

204 - Low Radiation Angle Full-Wave Loop Antenna for 80m

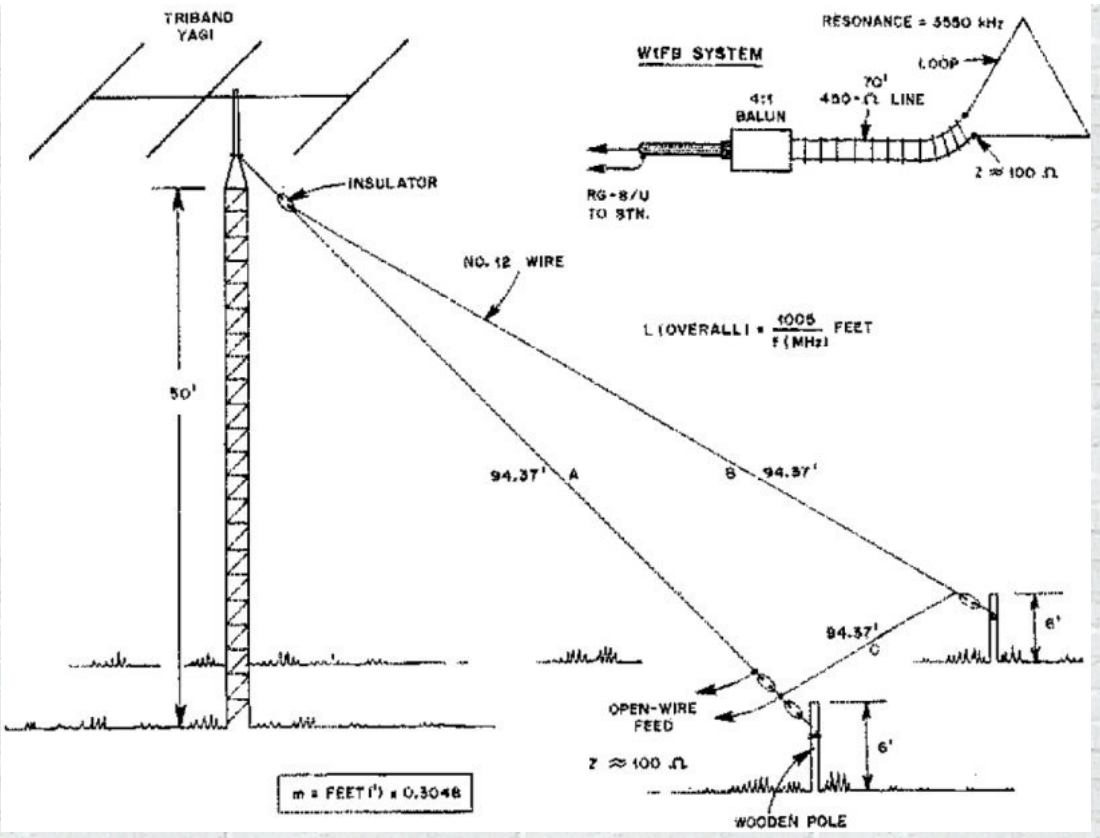

205 - Collinear Antenna Gain=3dB for 2m

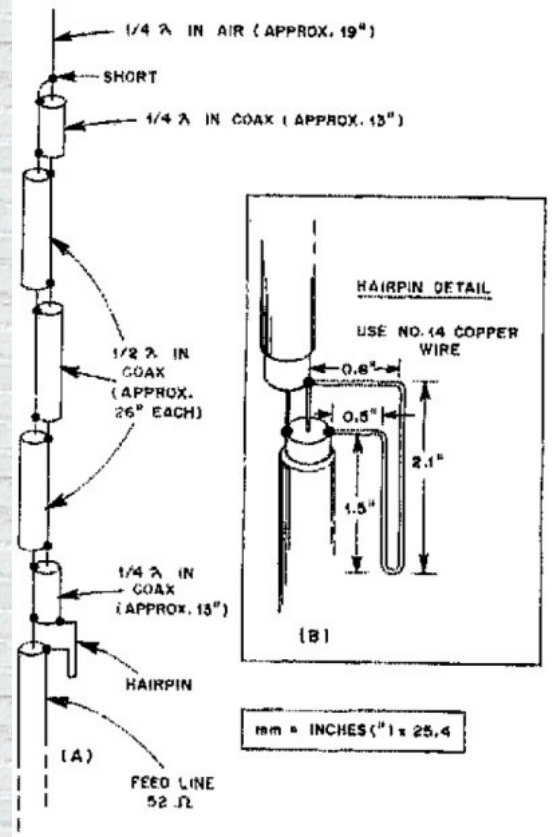

206 - X-Ray Monoband Antenna Gain=6.5dBd

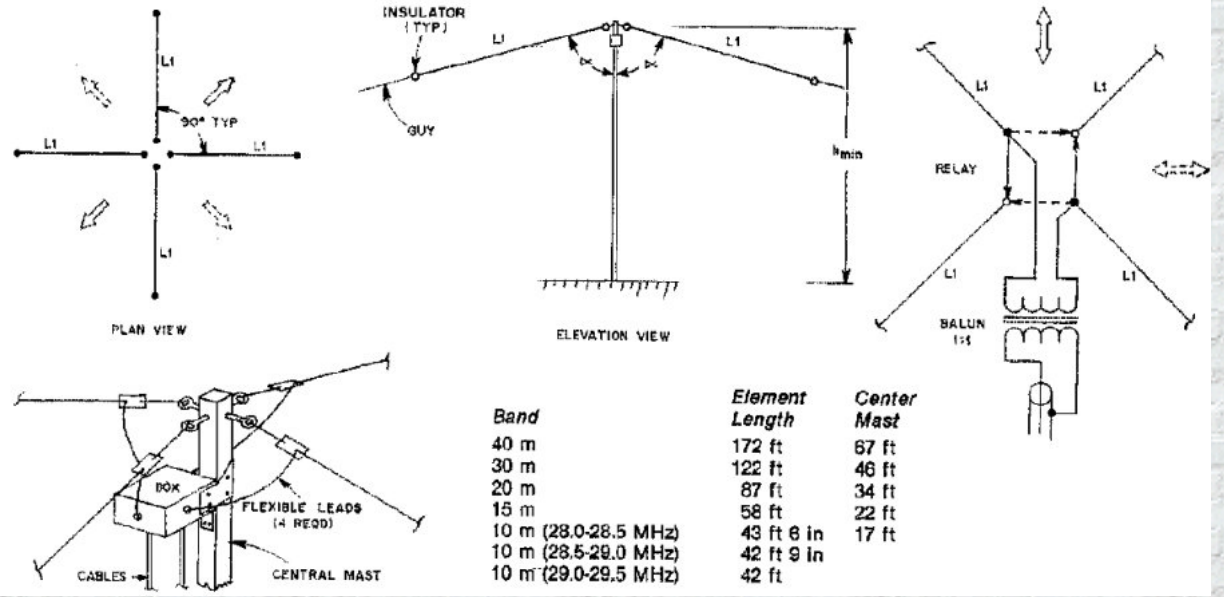

Band	Element Length	Center Mast
40 m	172 ft	67 ft
30 m	122 ft	46 ft
20 m	87 ft	34 ft
15 m	58 ft	22 ft
10 m (28.0-28.5 MHz)	43 ft 6 in	17 ft
10 m (28.5-29.0 MHz)	42 ft 9 in	
10 m (29.0-29.5 MHz)	42 ft	

207 - Broadside Collinear Curtain Array for 20m

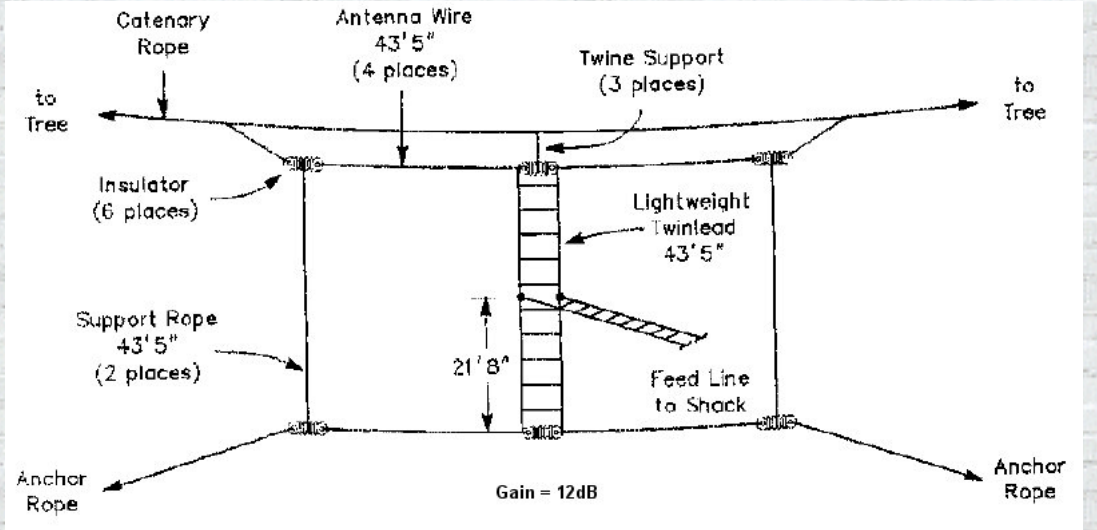

208 - Shrunk Loop Antenna for 80m, 40m

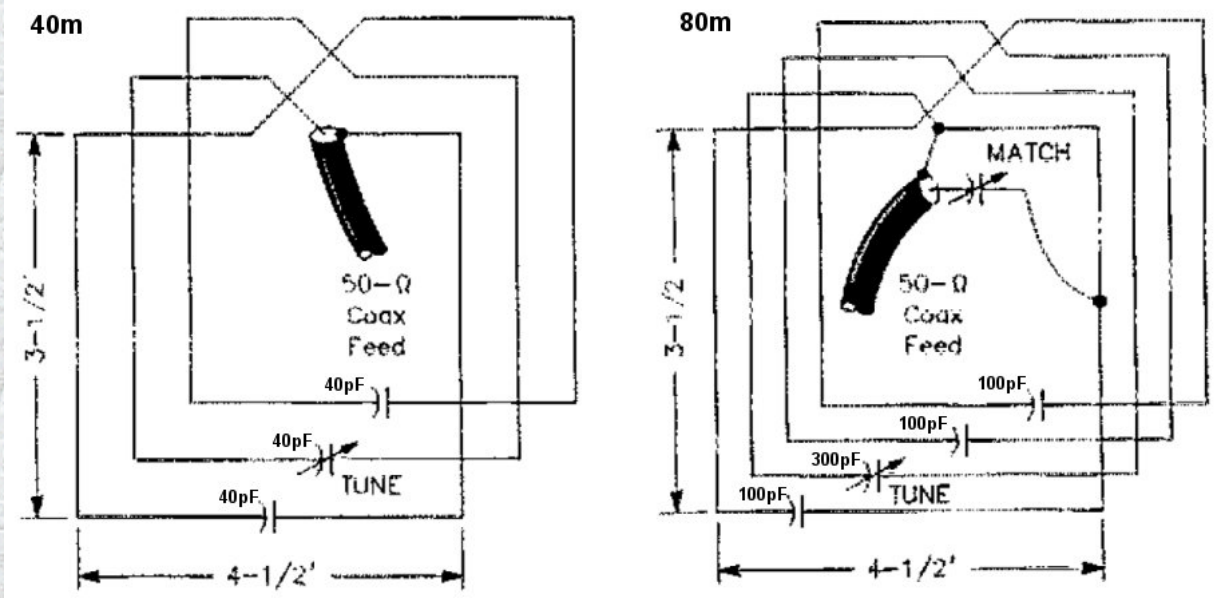

209 - λ/3 Multiband Dipole for 40m, 20m, 17m, 15m, 13m, 10m

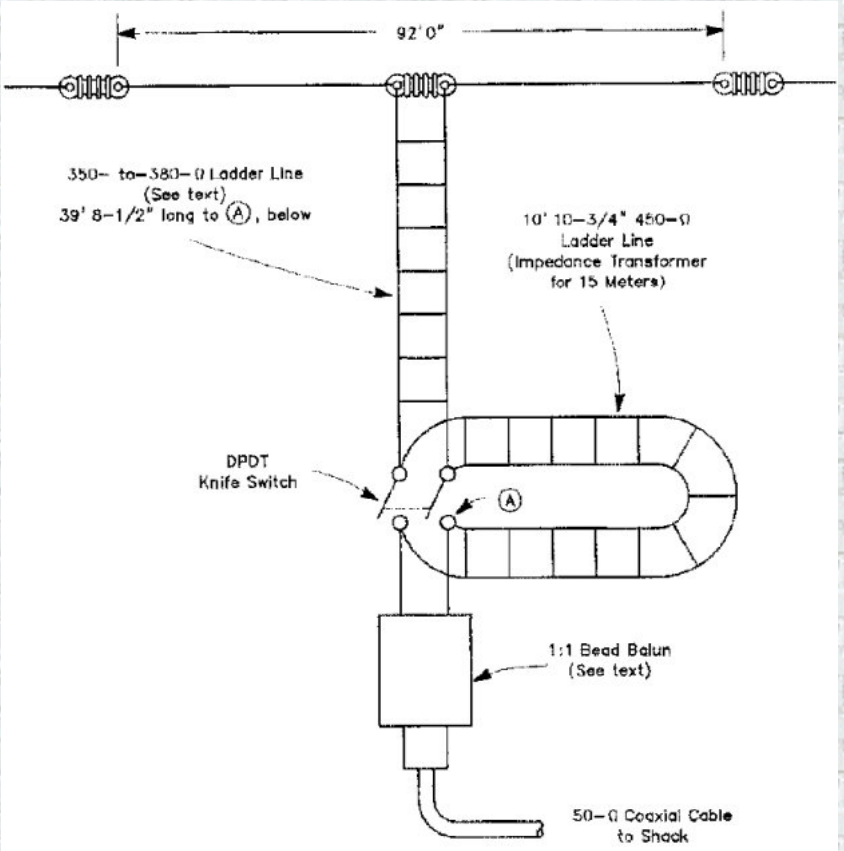

210 - K3LR Sloper Antenna Gain=3dB for 160m

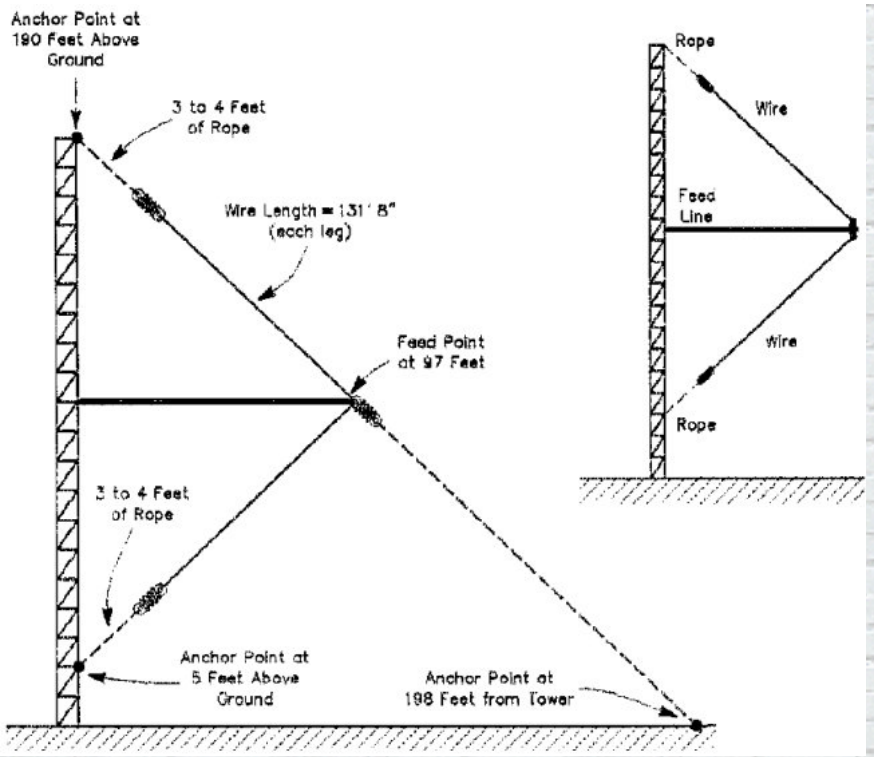

211 - Mini Folded Vertical Monopole Antenna for 160m, 80m, 40m

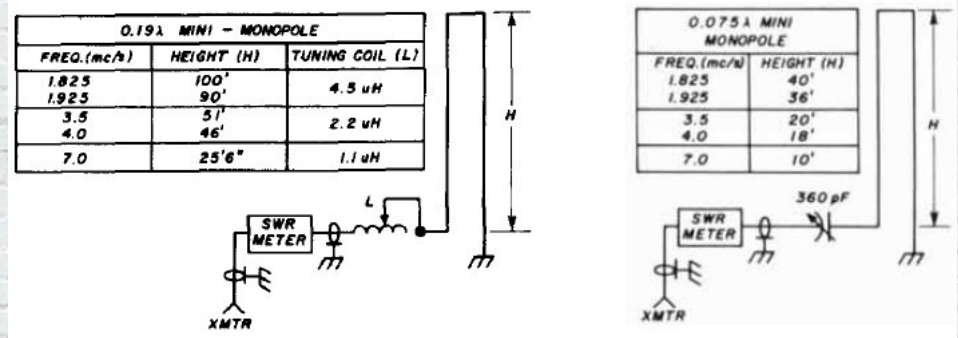

0.19λ MINI - MONOPOLE		
FREQ.(mc/s)	HEIGHT (H)	TUNING COIL (L)
1.825 1.925	100' 90'	4.5 uH
3.5 4.0	51' 46'	2.2 uH
7.0	25'6"	1.1 uH

0.075λ MINI MONOPOLE	
FREQ.(mc/s)	HEIGHT (H)
1.825 1.925	40' 36'
3.5 4.0	20' 18'
7.0	10'

212 - Three Band Dipole for 80m, 40m, 20m

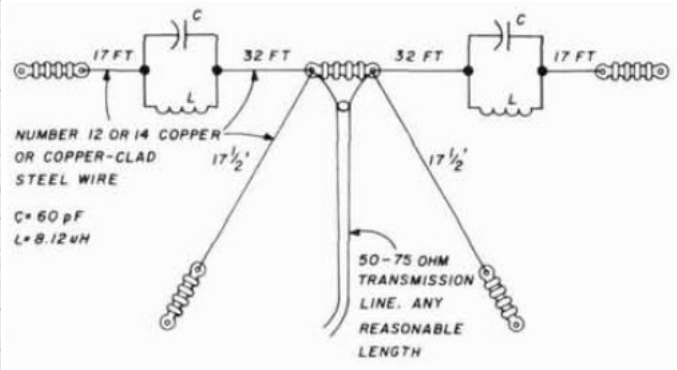

213 - Stub Matched Dipole Antenna

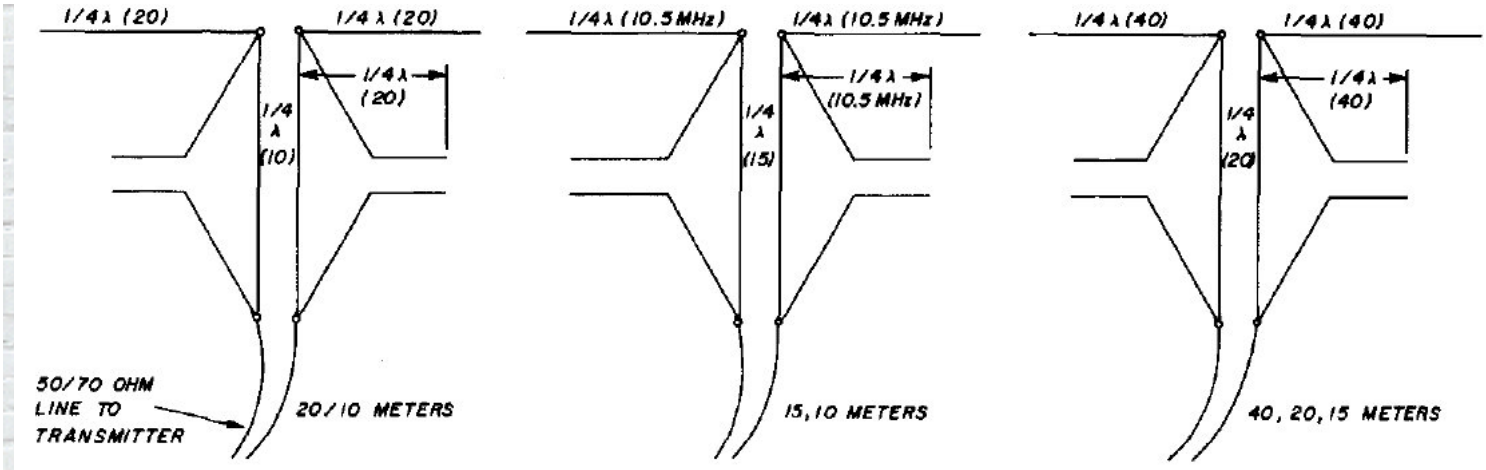

214 - Inverted-Vee Antenna with Bazooka Match

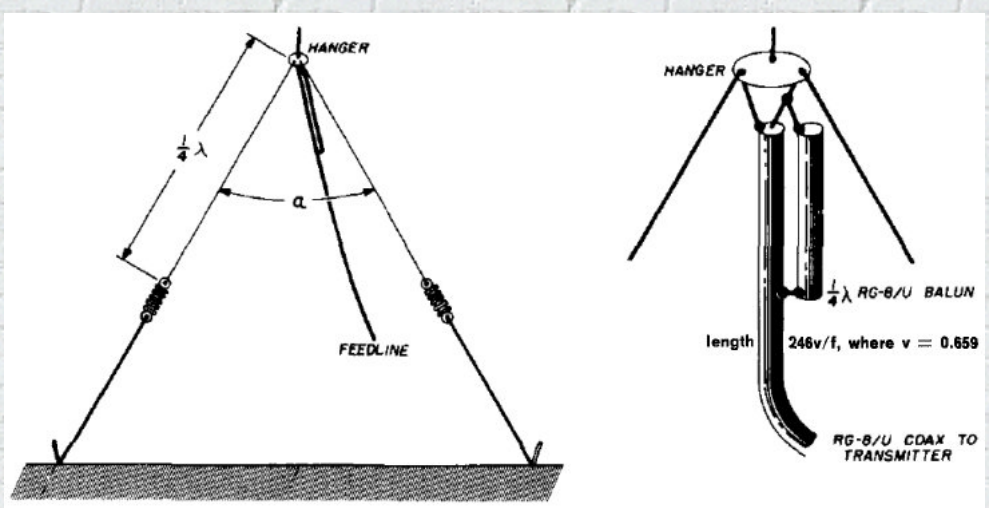

215 - Multiband Long Wire Antenna for 40m, 20m, 15m, 10m

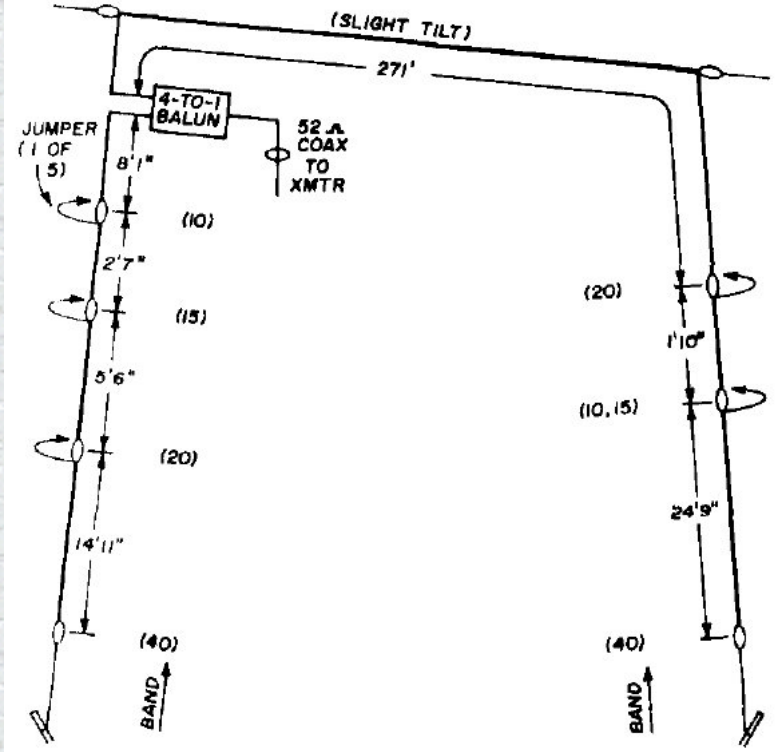

216 - Converted Vee Antenna for 80m, 40m

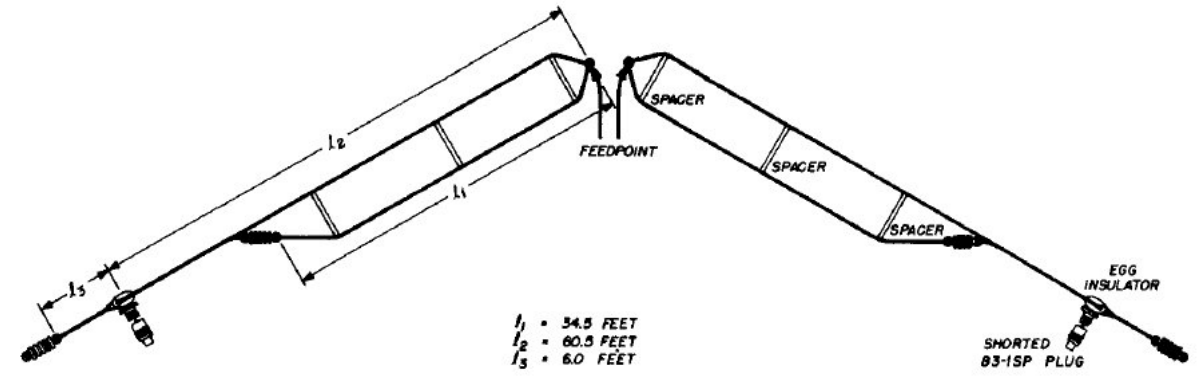

217 - Swiss Quad Antenna for 20m, 15m, 10m

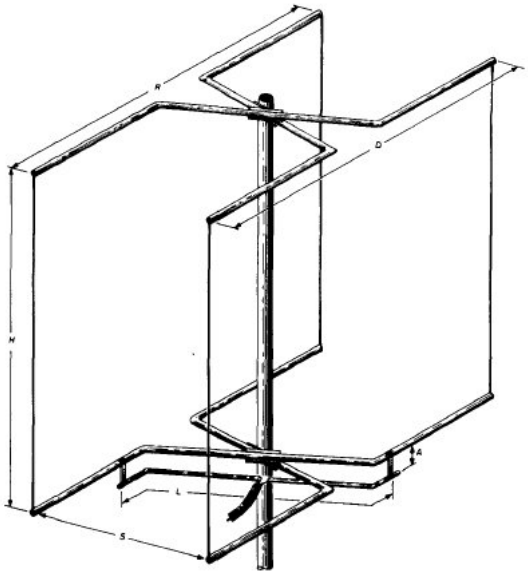

Dimensions for the Swiss quad (in inches).

frequency (MHz)	reflector horizontal (R)	radiator horizonal (D)	vertical (H)	spacing (S)	gamma length (L)	gamma spacing (A)
14.05	248	223½	236	84	188½	4¼
14.2	245	221	233	83	186½	4¼
21.05	165	149	157	56	126	2½
21.2	162½	148	155½	55½	124½	2½
28.05	124	112	118	42	94½	2
28.5	122	110	116	41½	93	2

218 - Japanese Quad Antenna for 20m, 15m, 10m

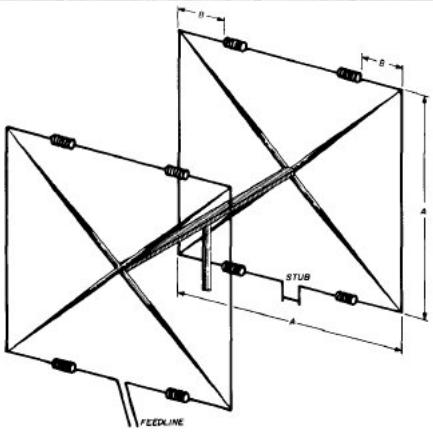

Construction details of the Japanese quad (in inches).

frequency (MHz)	quad side (A)	spacing	coil location (B)	coil (μH)	winding info
14	152	101	38	3.0	17½ turns no. 14, 1½" diameter, 5" long
21	98	67	24½	2.0	11 turns no. 14, 1½" diameter, 3½" long
28	77	50	19¼	1.5	9½ turns no. 14, 1½" diameter, 3½" long

219 - Seven-Elements Triangle Beam Antenna for 20m

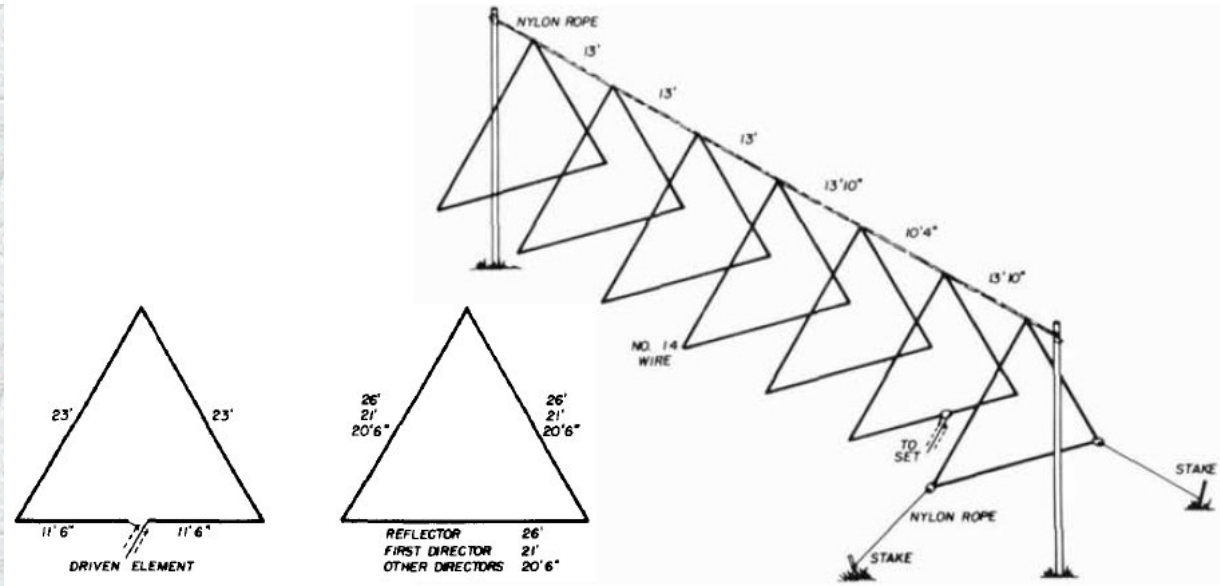

220 - Log Periodic Wire Antenna for 40m

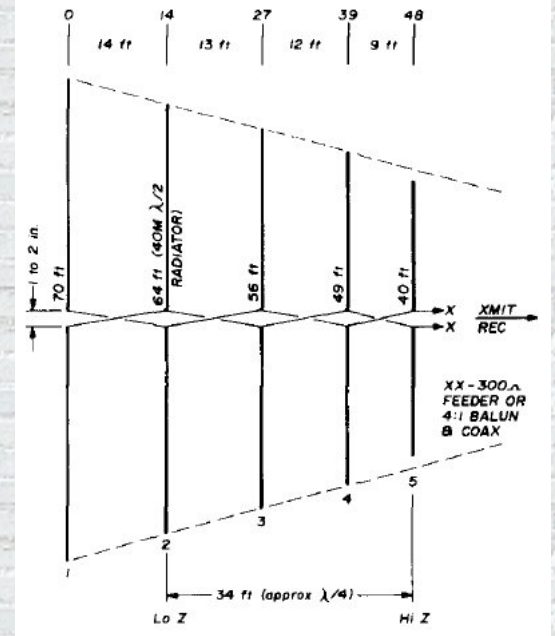

221 - Three-Elements 90-degrees Wire Beam for 20m

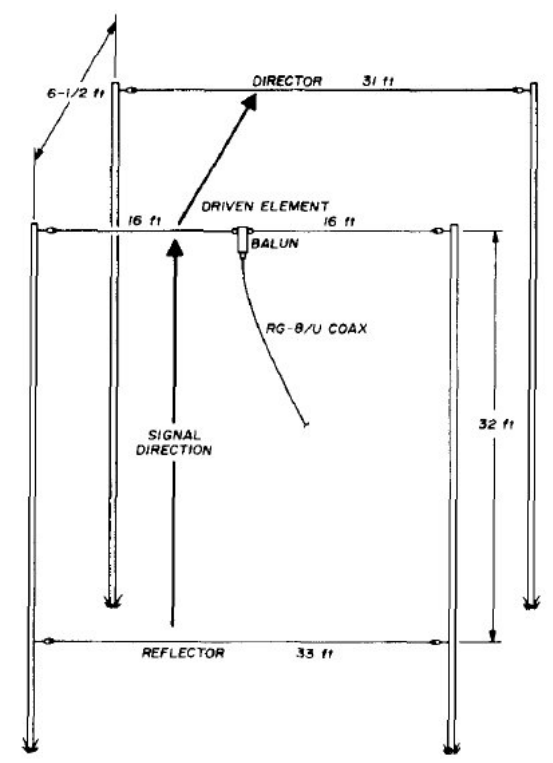

222 - Two-Elements Wire Beam for 20m

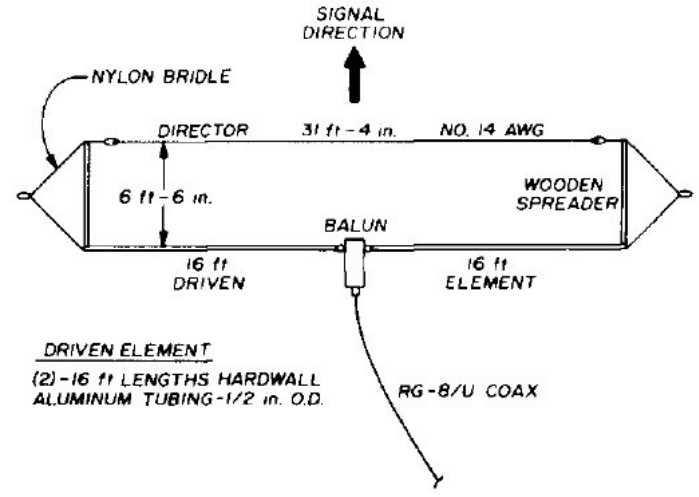

223 - Suitcase-Fit Dipole Antenna for 80m, 40m, 20m

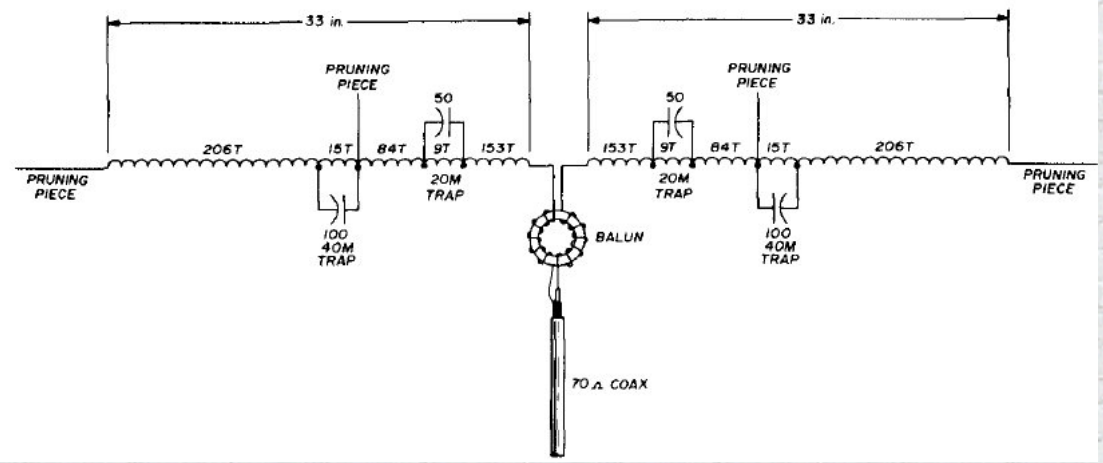

224 - Multiband Coaxial Dipole for 80m, 40m

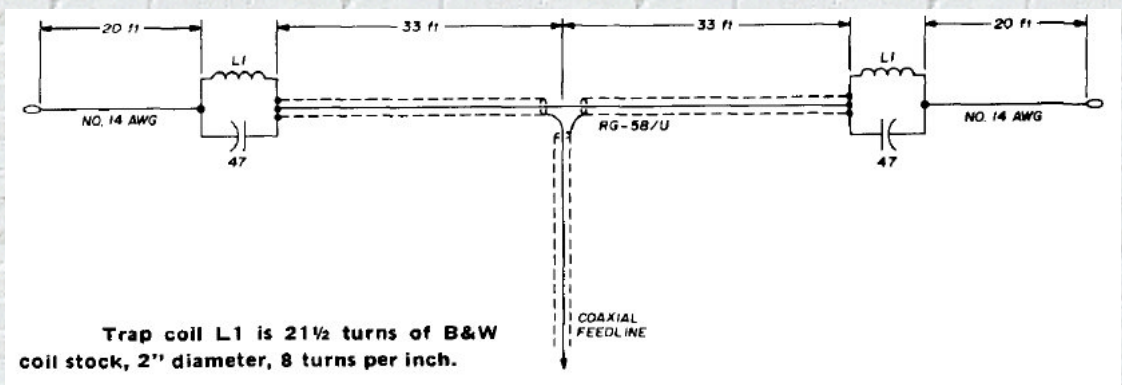

225 - Vertical Log Periodic Antenna for 80m, 40m

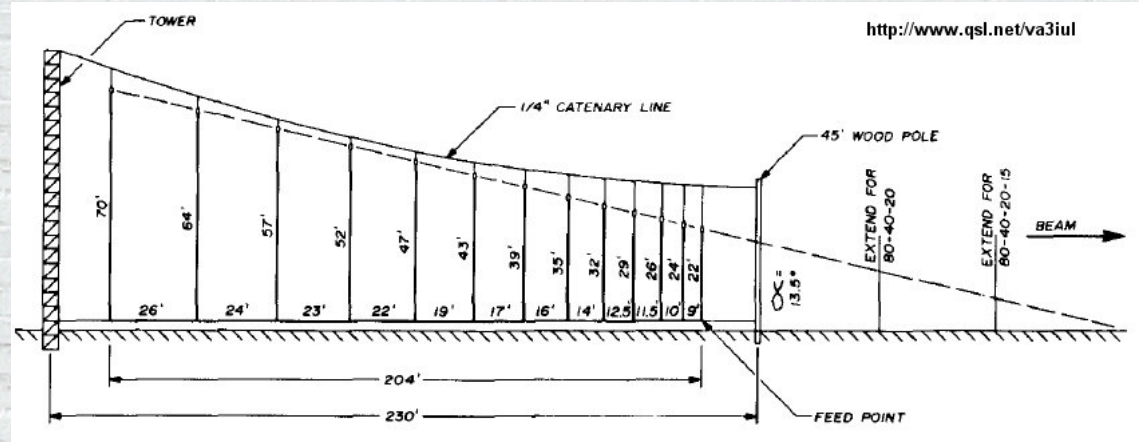

226 - Inverted Vertical Log Periodic Antenna for 40m

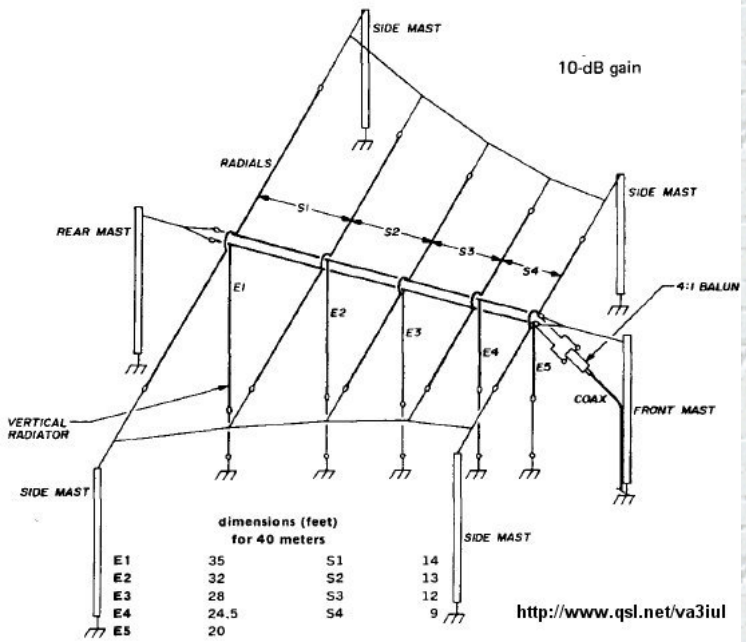

227 - Double Extended Zepp Antenna Gain=7dB for 15m

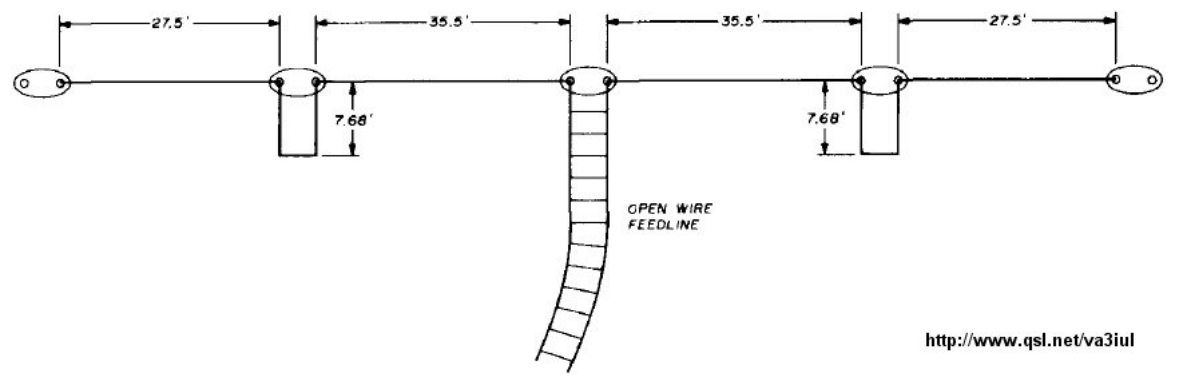

228 - Double Lazy-H Antenna G=10dB for 70cm

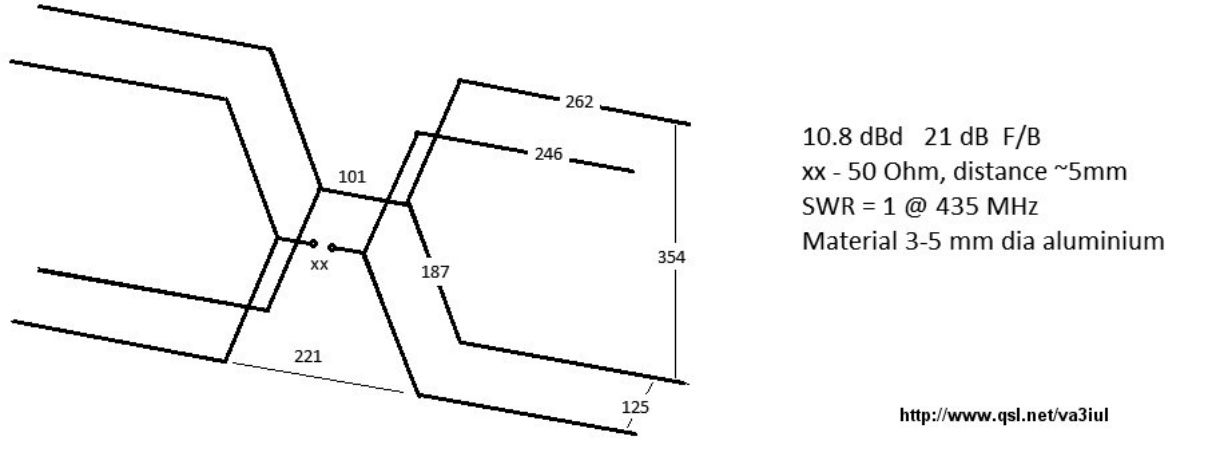

229 - Wire Log Periodic Antenna G=12dB for 15m, 20m

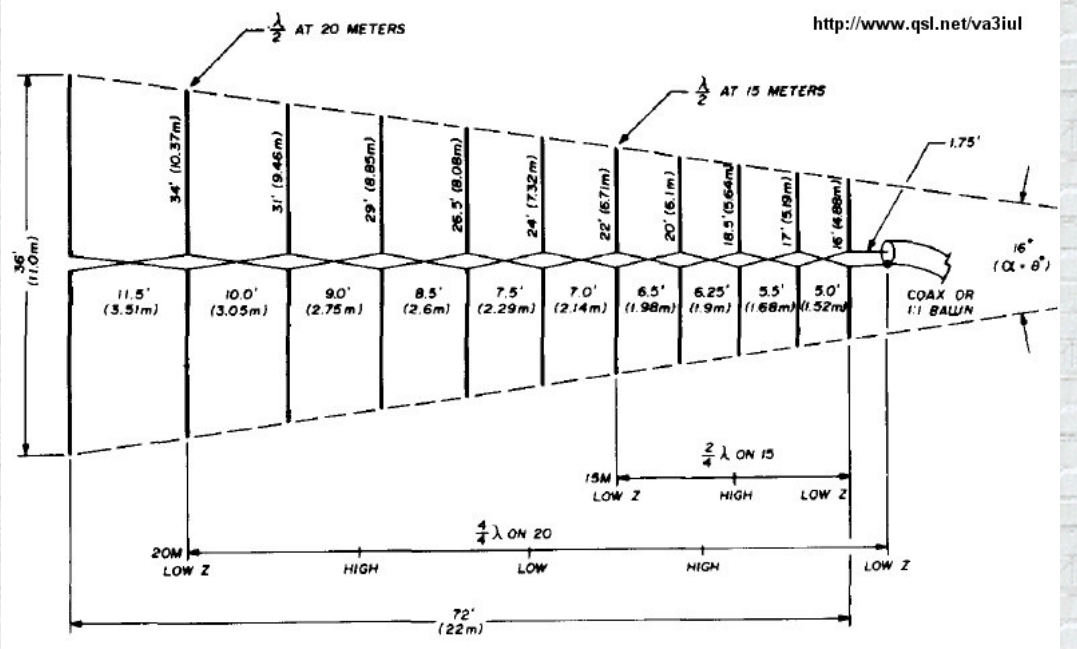

230 - Five-Elements Vertical Log Periodic for 80m, 40m, 20m

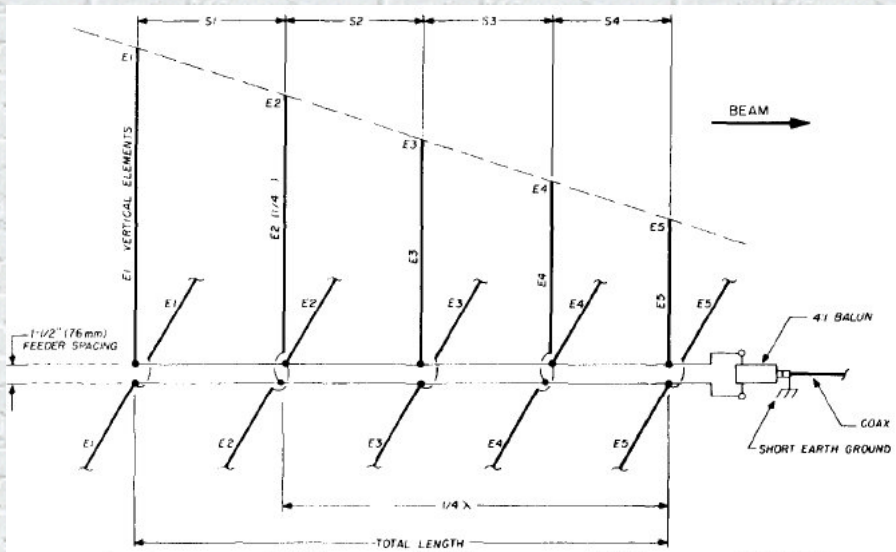

element	3.5-4.0[1]	3.8-4.0[2]	7.0-7.3[2]	14.0-14.35[1]
E1	70' (21.4 m)	65' (19.8 m)	35' (10.7 m)	17.5' (5.3 m)
E2	67' (20.4 m)	62' (18.9 m)	33' (10.0 m)	16.5' (5.0 m)
E3	58' (17.7 m)	55' (16.8 m)	28' (8.5 m)	14.0' (4.3 m)
E4	50' (15.3 m)	45' (13.7 m)	24.5' (7.5 m)	12.2' (3.7 m)
E5	43' (13.1 m)	40' (12.2 m)	20' (6.1 m)	10.0' (3.0 m)
S1	30' (9.2 m)	26' (7.9 m)	14' (4.3 m)	7.0' (2.1 m)
S2	27' (8.2 m)	24' (7.3 m)	13' (4.0 m)	6.5' (2.0 m)
S3	24' (7.3 m)	23' (7.0 m)	12' (3.7 m)	6.0' (1.8 m)
S4	19' (5.8 m)	18' (5.5 m)	9' (2.7 m)	4.5' (1.4 m)
total length	100' (30.5 m)	91' (27.8 m)	48' (14.6 m)	24' (7.3 m)
mast height	80' (24.4 m)	75' (22.9 m)	50' (15.3 m)	30' (9.2 m)
pole height	45' (13.7 m)	40' (12.2 m)	25' (7.6 m)	20' (6.1 m)

http://www.qsl.net/va3iul

231 - Sloping Delta Loop Antenna for 40m

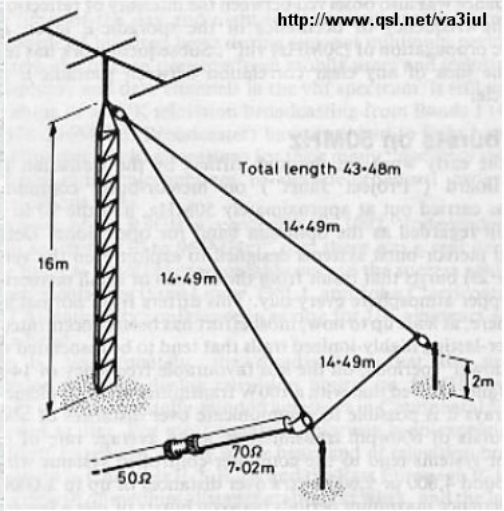

232 - Doublet Antenna for 160m

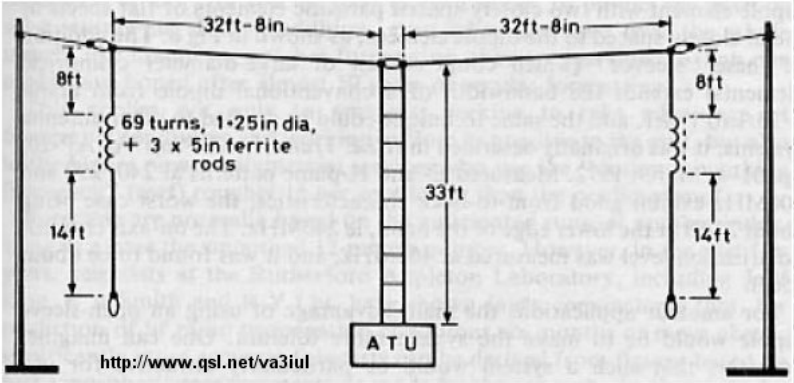

233 - Log Periodic Wire Beam for 40m

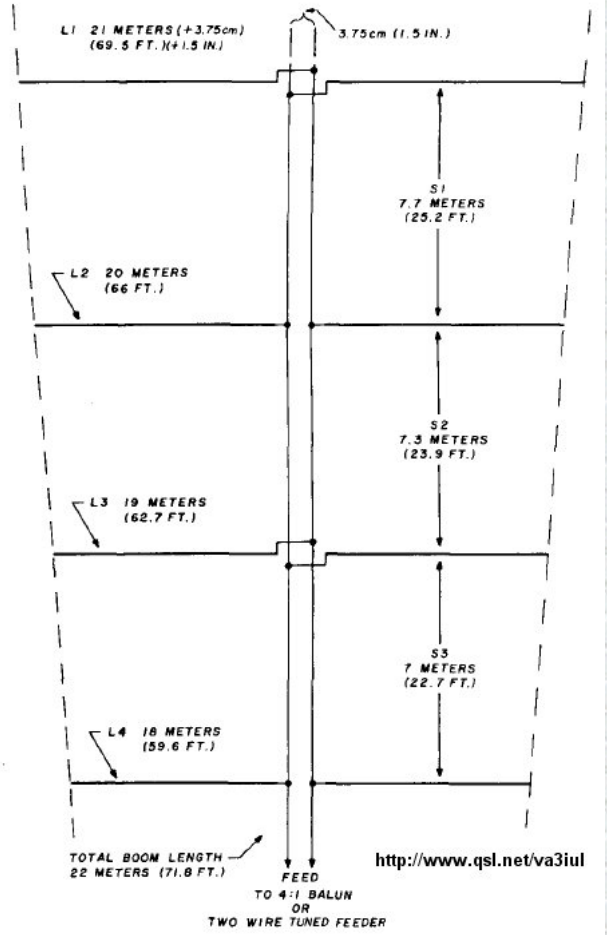

234 - G3LDO Wire Beam Antenna for 20m, 15m, 10m

http://www.qsl.net/va3iul

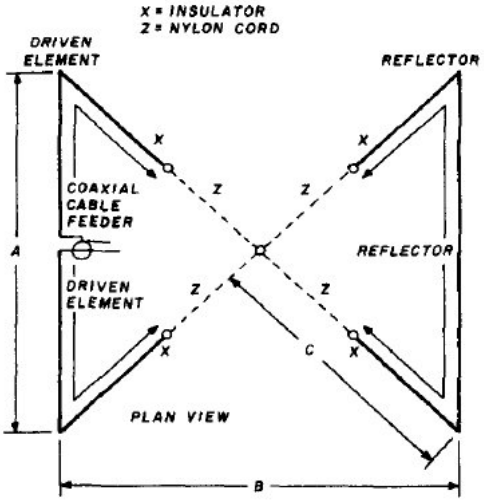

Data for the G3LDO wire-beam antenna. All dimensions are in inches and are for insulated wire; multiply by 1.04 for uninsulated wire. Dimension C is approximate.

band	reflector	driven element	A	B	C	D
20	452	417	245	263	180	33
15	302	279	154	166	113	22
10	225	208	114	122	85	15

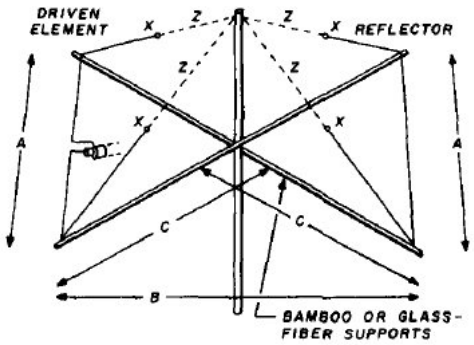

GENERAL CONSTRUCTION DETAILS WITH DIMENSION REFERENCES

235 - Phased Delta Loop Array for 20m

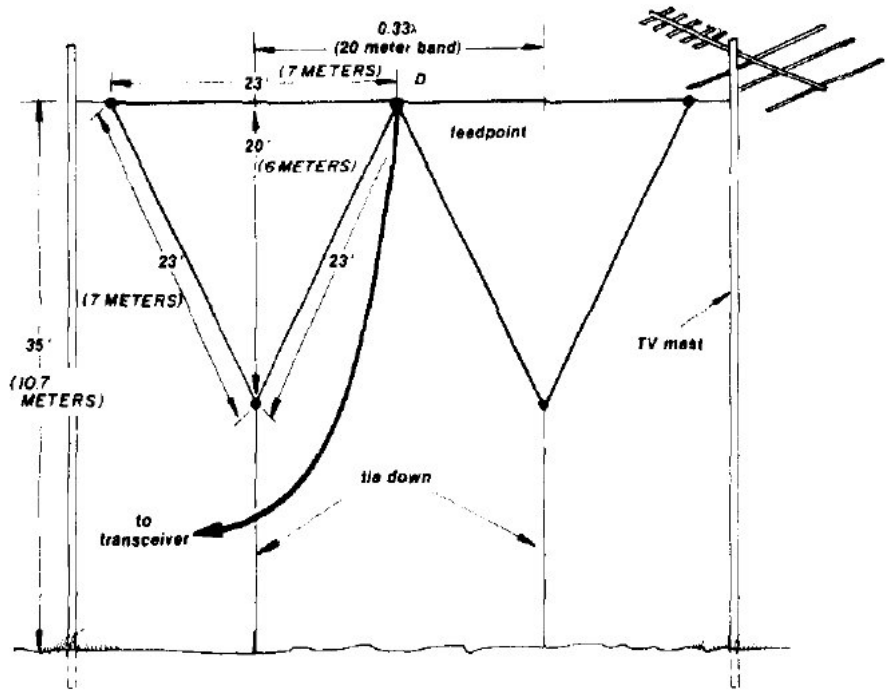

spacing wavelength	feet	(meters)	gain (dB)
0.33	23	(7)	2.0
0.40	27	(8)	2.8
0.50	34	(10)	4.0
0.65	44	(13)	4.8

http://www.qsl.net/va3iul

236 - Dual Band V-dipole for 80m, 40m

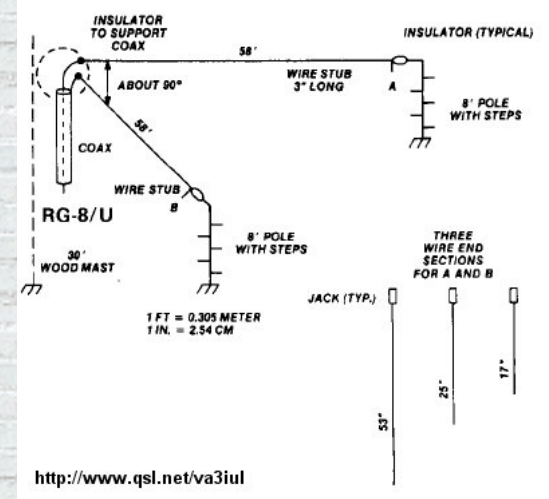

http://www.qsl.net/va3iul

237 - Collinear Array 5dB-Gain for 15m

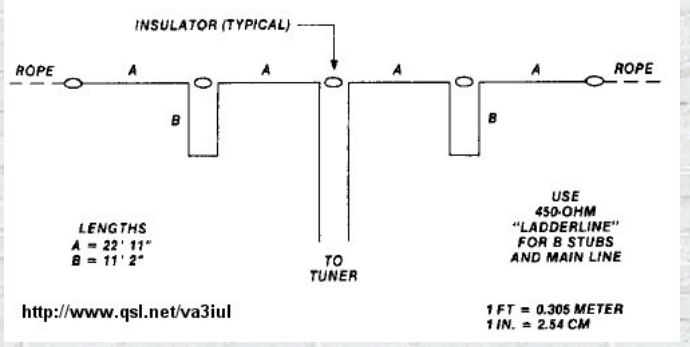

http://www.qsl.net/va3iul

238 - Two-Band Quad Loop Antenna 80m, 40m

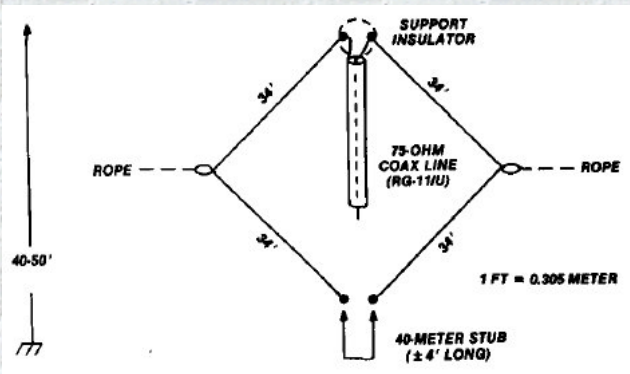

http://www.qsl.net/va3iul

239 - K7CW Quad Antenna

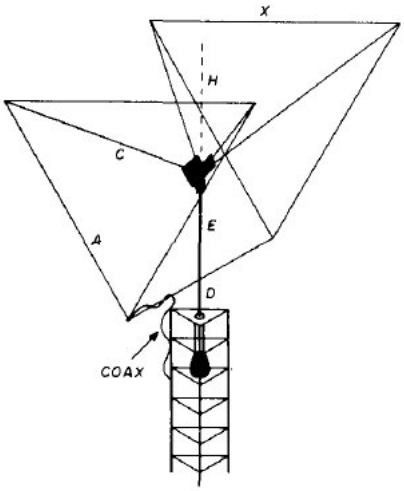

http://www.qsl.net/va3iul

$X = \frac{1030}{9.84F}$

$A = \frac{1005}{9.84F}$

$H = \frac{X}{2}$

$D = .2\lambda$

$E = \sqrt{X_2 - H^2} - H$

$C = \sqrt{2H^2 + \left(\frac{D}{2}\right)^2}$

Where F = design frequency of antenna (3X = total distance around reflector loop).

3A = total distance around driven element loop.

= distance from main hub to top of antenna (the imaginary plane which contains the tips of all four spreaders).

where λ = wavelength at design frequency.
D = element spacing
= length of bottom spreader.

= distance from bottom spreader to main hub.

= distance from hub to where loop is attached to main spreader.

antenna design frequencies (in met

	3.575 MHz	3.8 MHz	7.05 MHz	7.2 MHz	14
X	29.2722	27.5389	14.8437	14.5344	
Y	87.8165	82.6168	44.5311	43.6033	2
A	28.5617	26.8705	14.4834	14.1817	
B	85.685	80.6116	43.4502	42.5450	2
H	14.6361	13.7695	7.42184	7.26722	
D	16.7832	15.7895	8.51064	8.33333	
E	10.7144	10.0800	5.43317	5.31998	
C	22.3349	21.0124	11.3258	11.0899	

	21.3 MHz	28.15 MHz	28.6 MHz	29 MHz	50
X	4.91305	3.71751	3.63902	3.60855	
Y	14.7392	11.1525	10.9771	10.8257	
A	4.79380	3.62728	3.57021	3.52097	
B	14.3814	10.8818	10.7106	10.5629	
H	2.45653	1.85876	1.82951	1.80428	
D	2.81690	2.13144	2.09790	2.06897	
E	1.79830	1.36070	1.33929	1.32082	
C	3.74870	2.83649	2.79186	2.75335	

Note: X = length of reflector loop side
Y = distance around reflector loop
A = length of driven element loop side
B = total distance around driven element loop
H = distance from hub to top of antenna
D = bottom spreader length – element spacing
E = distance from bottom spreader to main hub
C = distance from hub to where loop is attached to main spreader, that is, spreader length

240 - Broadband Short Dipole for 80m

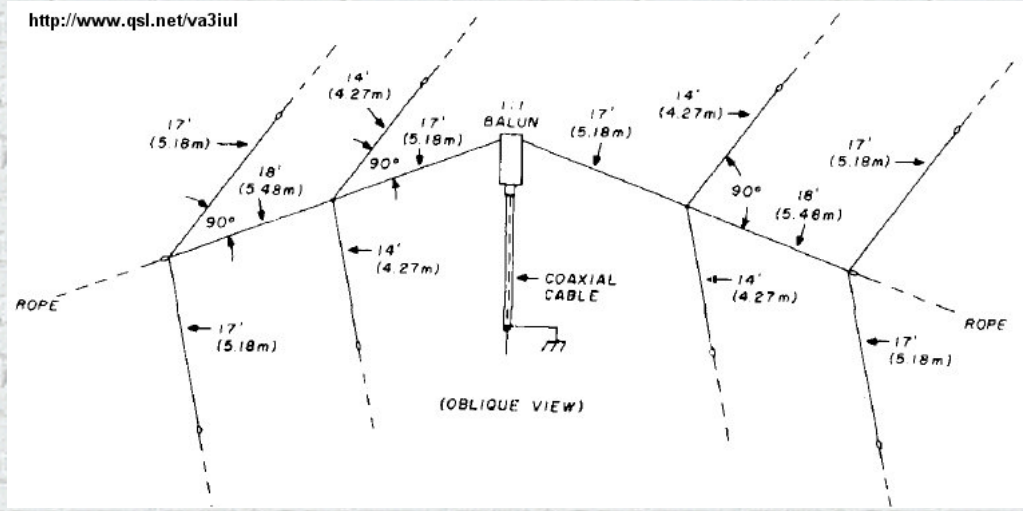

241 - Off-Center Fed Dipole for 40m, 20m, 10m

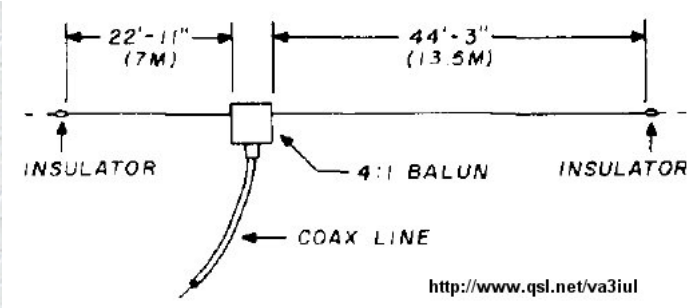

242 - Broadband Sloper Antenna for 80m

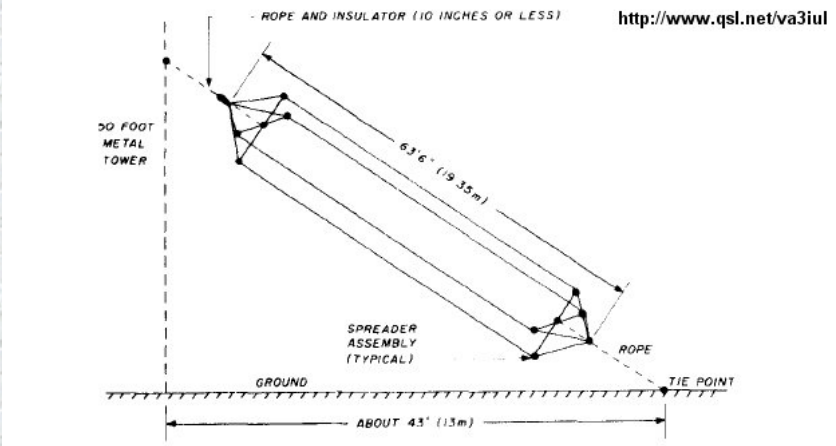

80-meter WD4FAB broadband sloper. Spreader assemblies are made of 36-inch long fiberglass tubes. The four antenna wires are tied together about 24 inches past each spreader assembly. A nylon line may be required from the crossover point of the spreader to the outer insulator to prevent bowing. The SWR plot of the antenna falls below 1.4-to-1 at 3.5 MHz; 1.25-to-1 at 3.8 MHz and 1.4-to-1 at 4.0 MHz. Feedpoint resistance of the antenna may be changed by altering the slope angle. The resonant frequency is adjusted by changing length — no climbing necessary!

243 - Two-Frequency Dipole Antenna for 80m

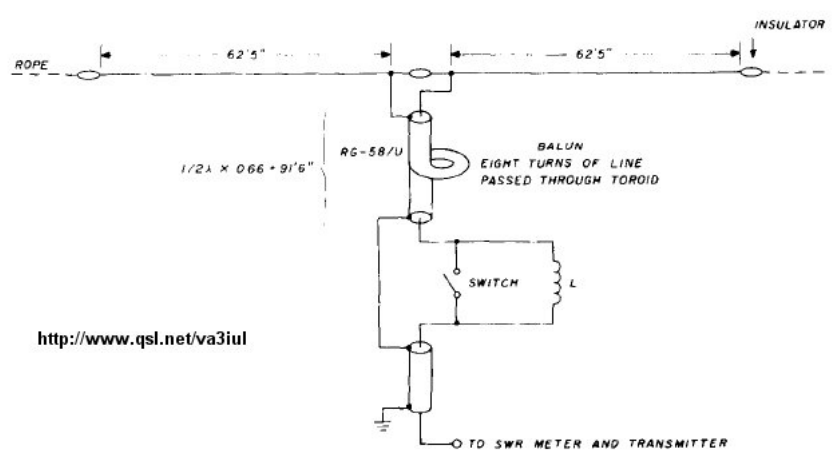

The W6TC two-frequency dipole for 80 meters. Antenna is cut for resonance at high frequency end of band. A single loading coil for operation at the low frequency end of the band is placed an electrical half-wavelength down the transmission line. The line is decoupled from the antenna by a simple balun placed directly at the antenna insulator. Toroid is powdered iron material T-200 (2" OD) (1.25" ID), 2-mix (red, μ = 10 (Amidon T-200-2), or equivalent.

244 - Top Loaded Vertical Antenna for 160m

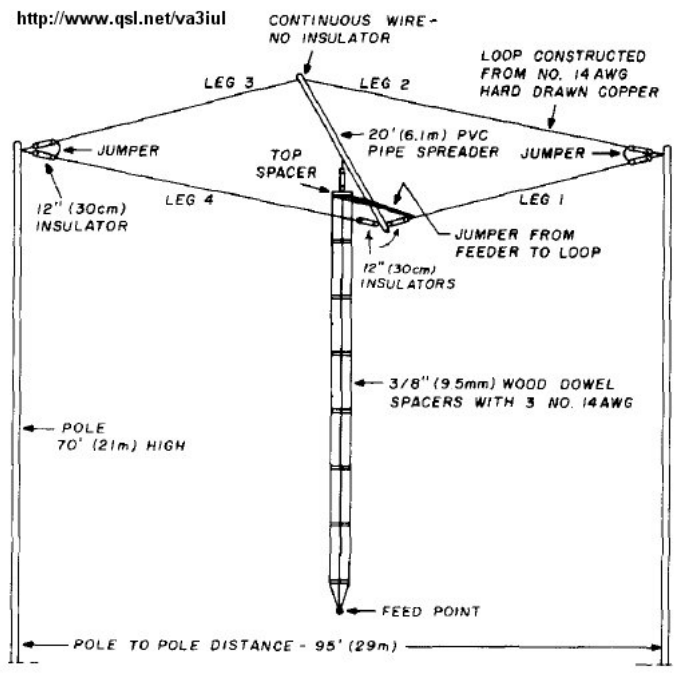

245 - Two Loop Beam Antenna for 20m, 15m

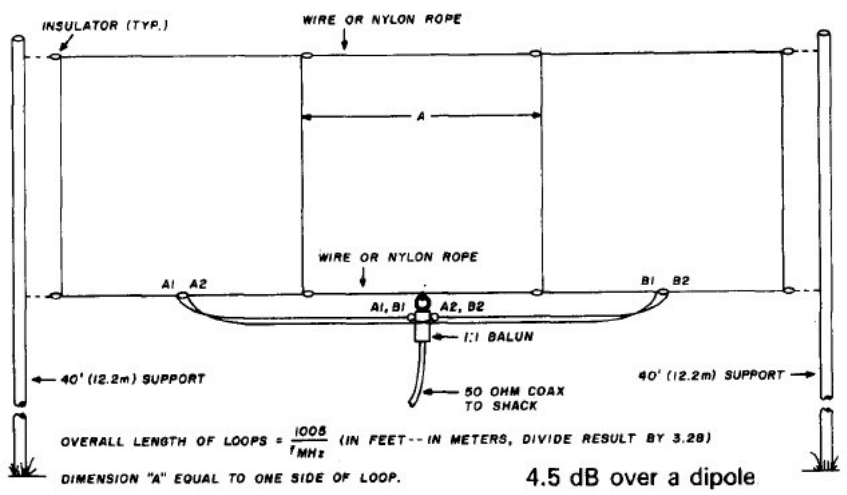

The W2TBZ loop beam. The phasing lines are made of 300-ohm TV line. Length of phasing line = $\frac{468}{f_{MHz}}$ × velocity factor of 300-ohm line. Balun is supported at center of lower nylon rope.

http://www.qsl.net/va3iul

246 - Corner-Fed Delta Loop Antenna for 80m, 40m, 20m

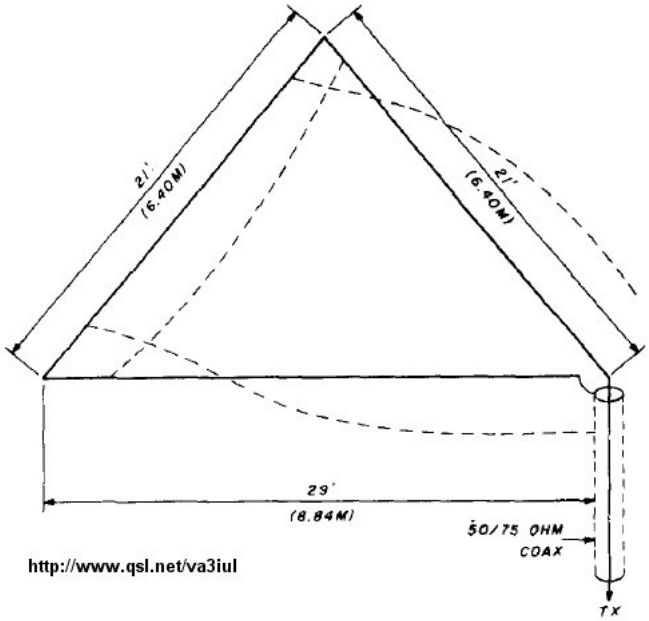

DIMENSIONS FOR FULL-SIZE CORNER-FED DELTA LOOPS

frequency (MHz)	total loop circumference (feet)	(meters)	length of each side (feet)	(meters)	length of base (feet)	(meters)
3.800	279 ft. 2 in.	(85.09)	82 ft.	(24.99)	115 ft. 2 in.	(35.10)
7.075	142 ft. 0 in.	(43.28)	42 ft.	(12.80)	58 ft. 0 in.	(17.68)
14.150	71 ft. 0 in.	(21.64)	21 ft.	(6.40)	29 ft. 0 in.	(8.84)

247 - Loaded Delta Loop Antenna for 40m, 20m

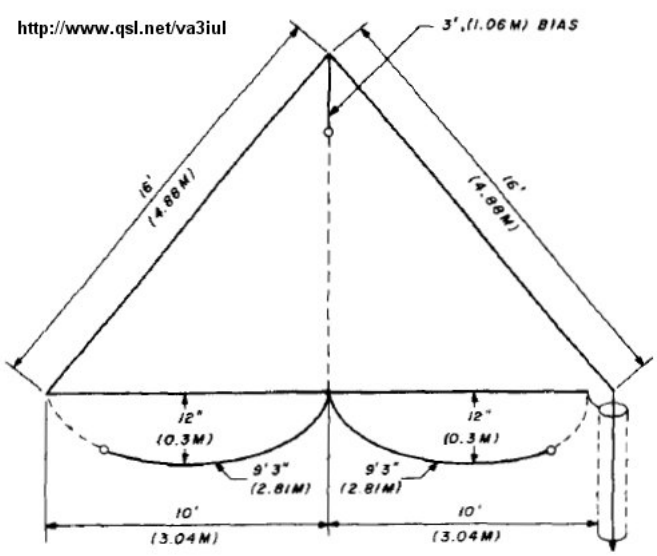

The final loaded loop for 14 MHz. All dimensions are doubled for operation on 7 MHz. Base loading wires are each 18 feet 4 inches (5.59 meters). The top loading wire is made taut by securing to base with thin light nylon cord.

248 - Compact Size Dipole for 80m

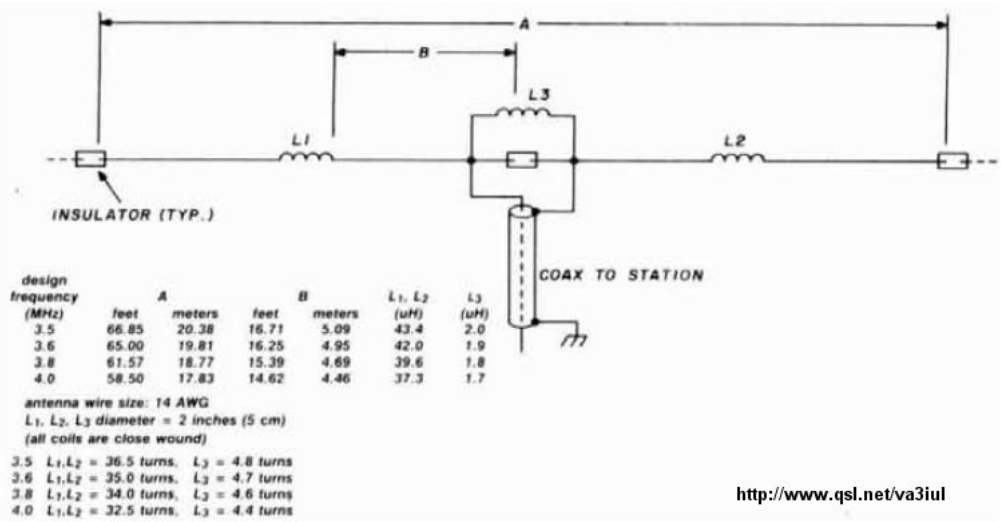

design frequency (MHz)	A feet	A meters	B feet	B meters	L_1, L_2 (uH)	L_3 (uH)
3.5	66.85	20.38	16.71	5.09	43.4	2.0
3.6	65.00	19.81	16.25	4.95	42.0	1.9
3.8	61.57	18.77	15.39	4.69	39.6	1.8
4.0	58.50	17.83	14.62	4.46	37.3	1.7

antenna wire size: 14 AWG
L_1, L_2, L_3 diameter = 2 inches (5 cm)
(all coils are close wound)

3.5 L_1,L_2 = 36.5 turns, L_3 = 4.8 turns
3.6 L_1,L_2 = 35.0 turns, L_3 = 4.7 turns
3.8 L_1,L_2 = 34.0 turns, L_3 = 4.6 turns
4.0 L_1,L_2 = 32.5 turns, L_3 = 4.4 turns

249 - JAWS 3dB Gain Antenna for 40m

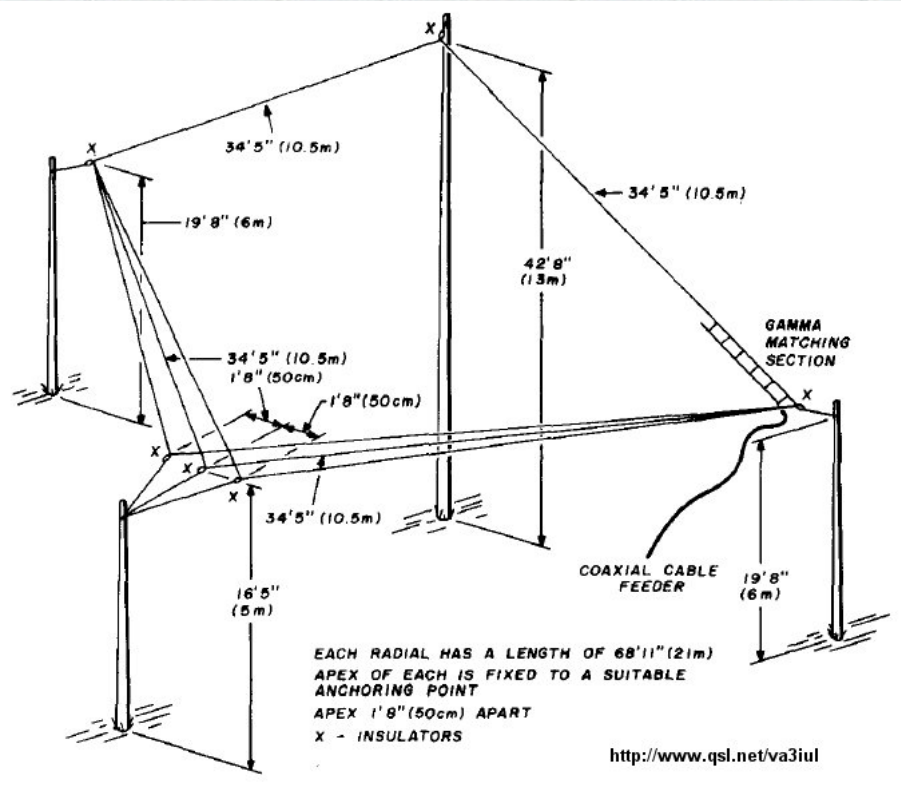

250 - Inverted-V Antenna for 160m

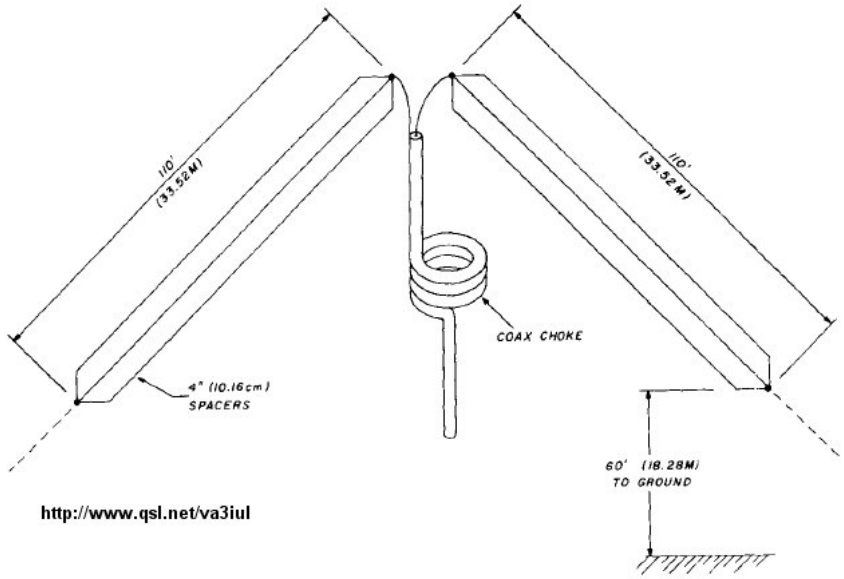

The inverted-V antenna for 160 meters at VE7BS. Wires all lie in the same plane. Apex is at 105 feet (32 meters).

---

251 - Lazy-U Antenna for 160m

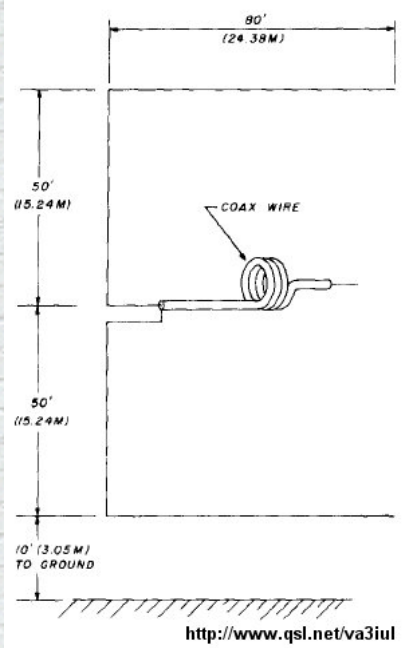

---

252 - AF3V Compact Antenna for 160m

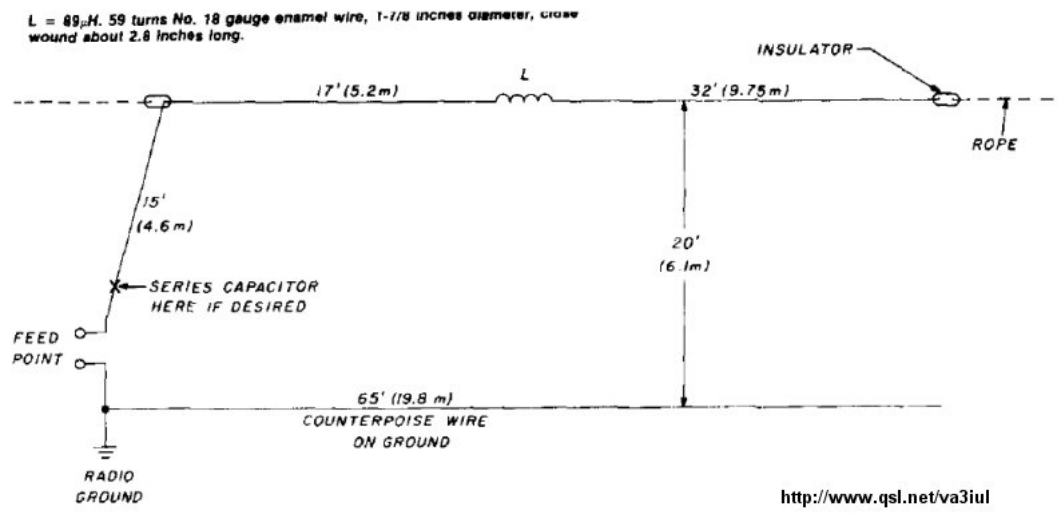

253 - Hot Beam Wire Antenna for 40m

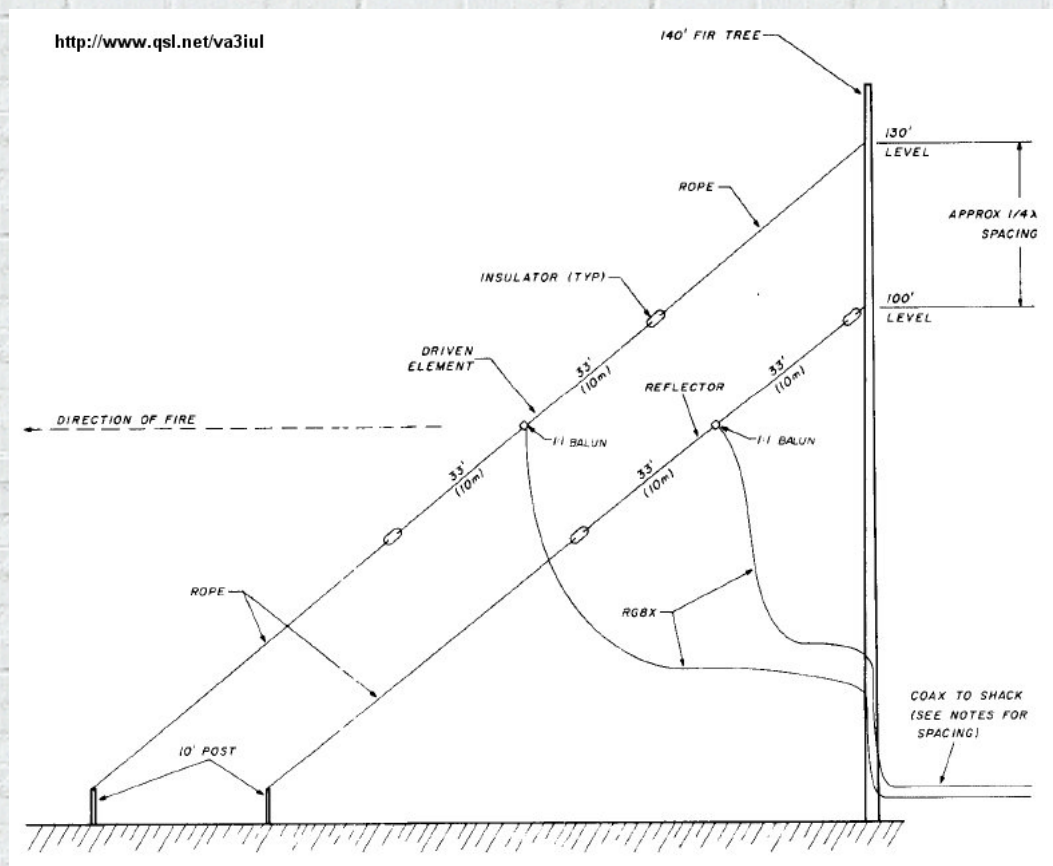

254 - Sloping Delta Loop for 40m

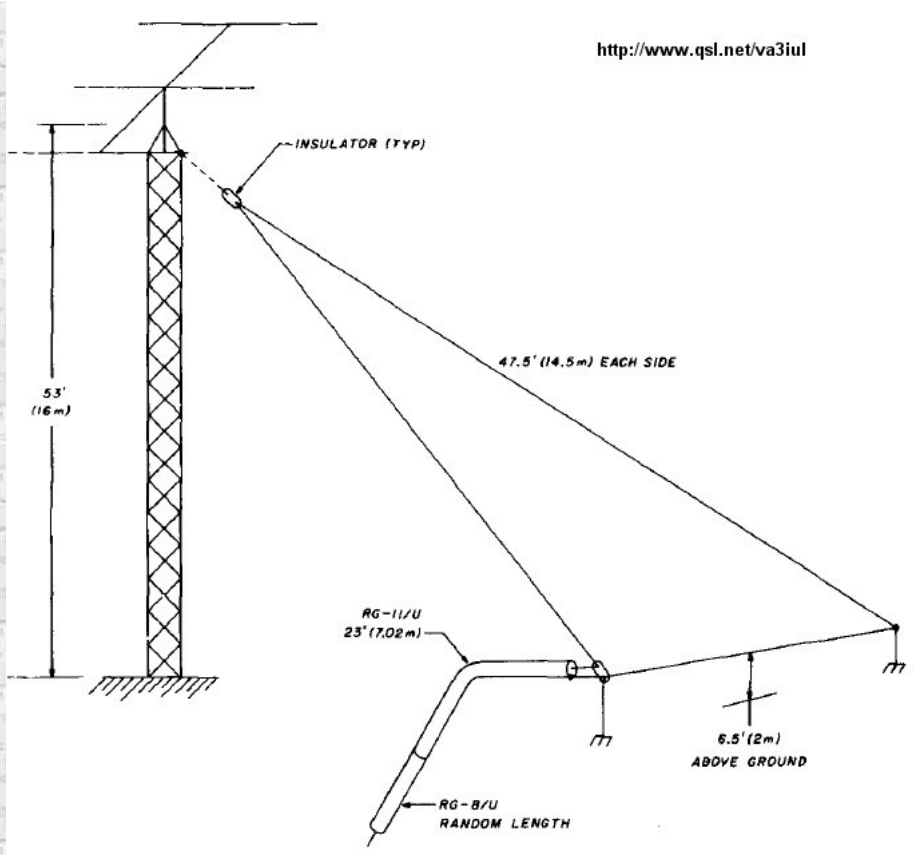

255 - K6FD Multiband Antenna with T-tuner

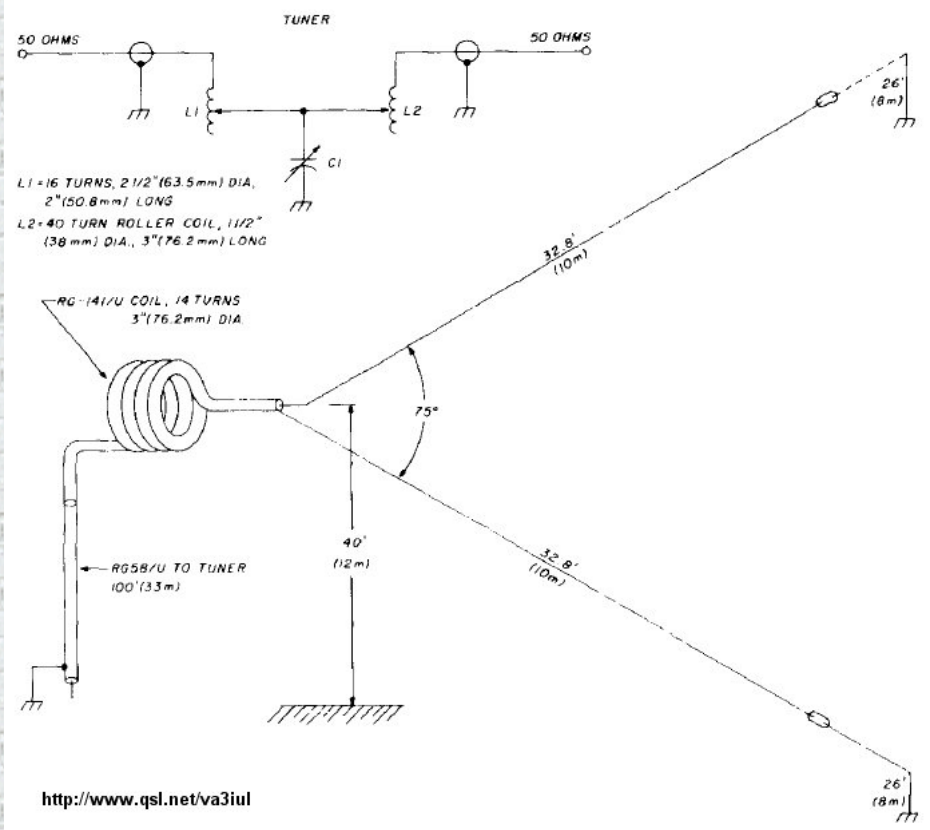

256 - Dual Band Dipole Antenna for 17m, 10m

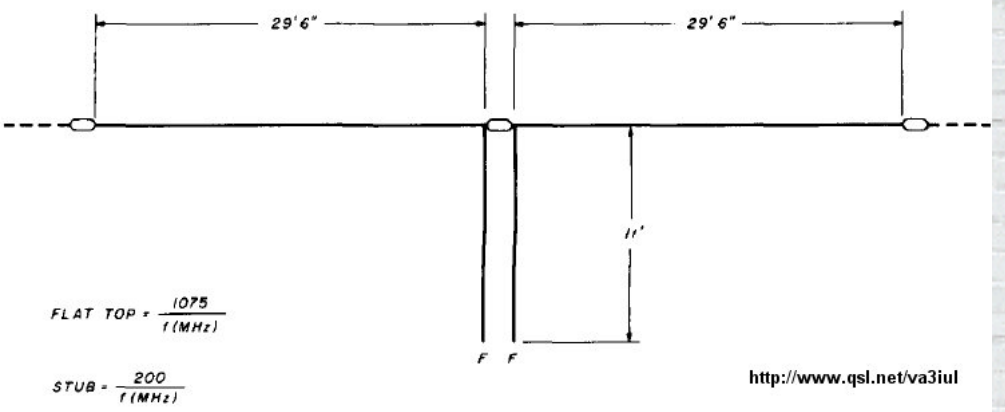

257 - Compact Travel Dipole Antenna for 10m, 15m, 20m

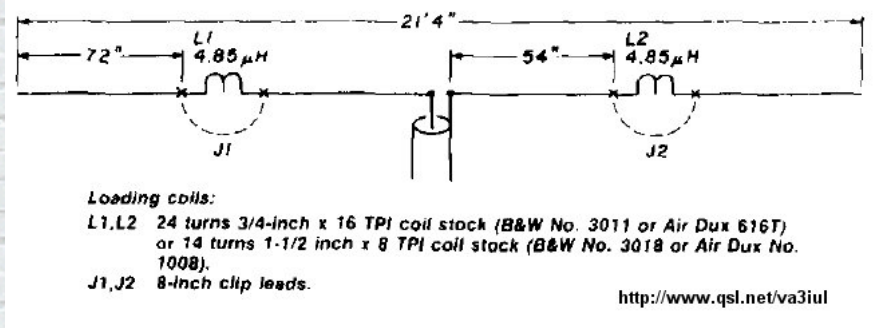

258 - End-Fire Antenna for 160m, 80m, 40m, 20m

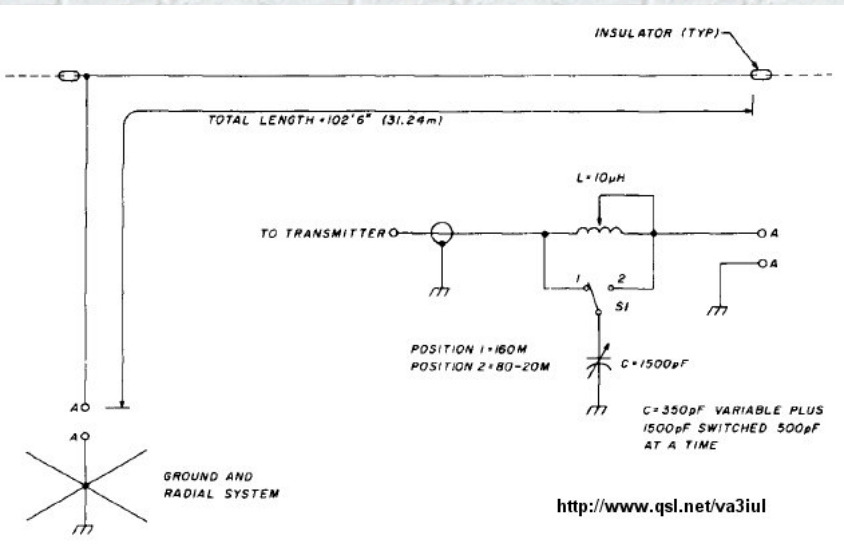

259 - Four Band Loop for 40m, 20m, 15m, 10m

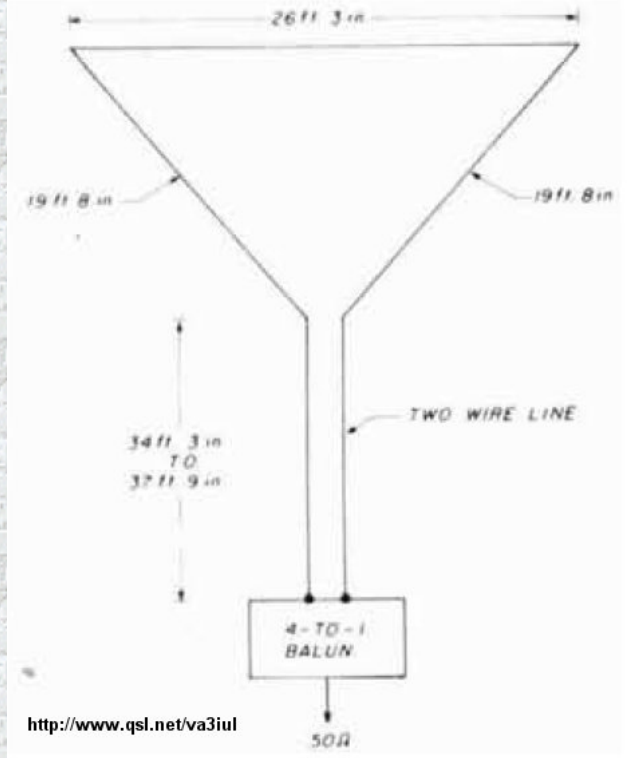

260 - Carolina Windom Antenna for 80 to 10m

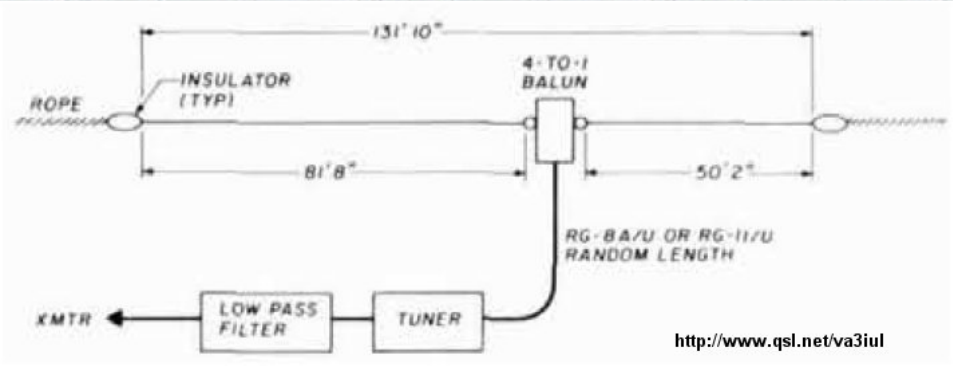

261 - Shortened Loaded Dipole for 40m

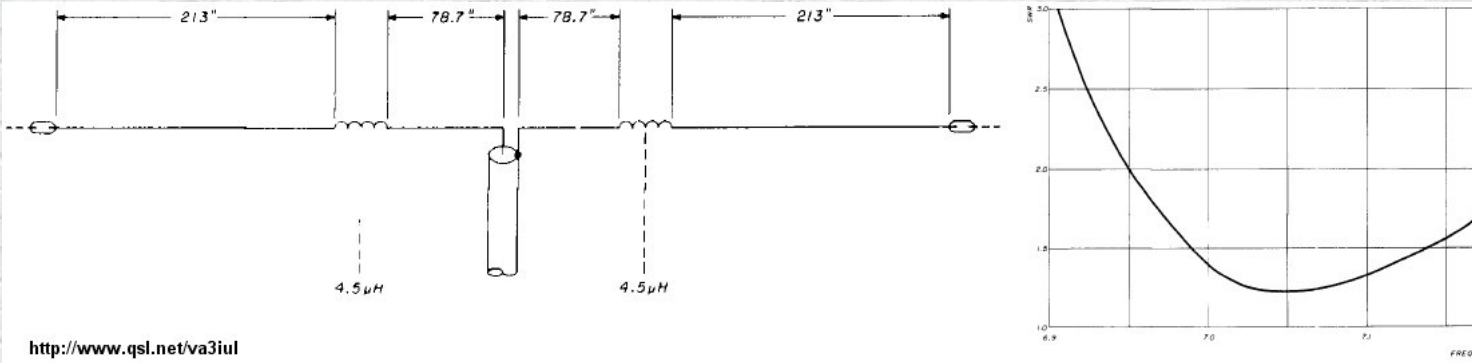

262 - Shortened Loaded Dipole for 80m

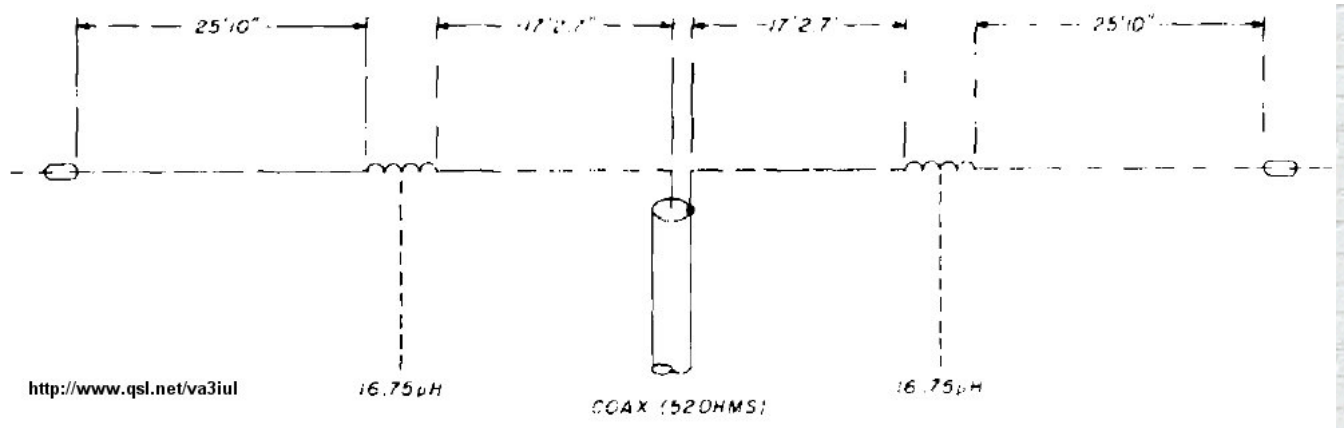

263 - Low Radiation Angle Inverted Delta Loop for 80m

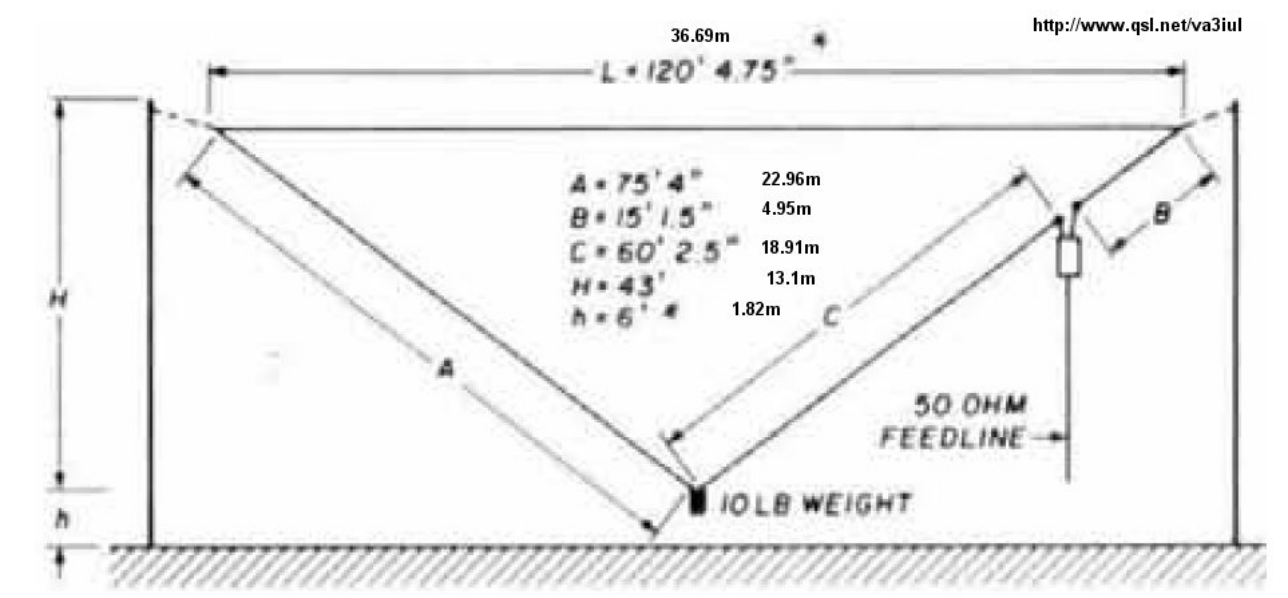

264 - Compact Dipole Antenna for 40m, 15m

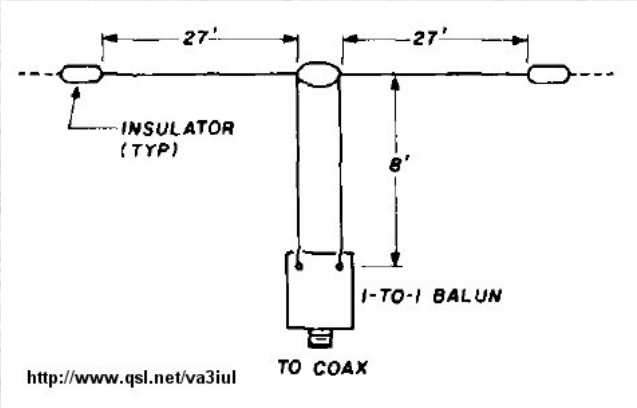

265 - Vertical Delta Loop for 40m to 10m

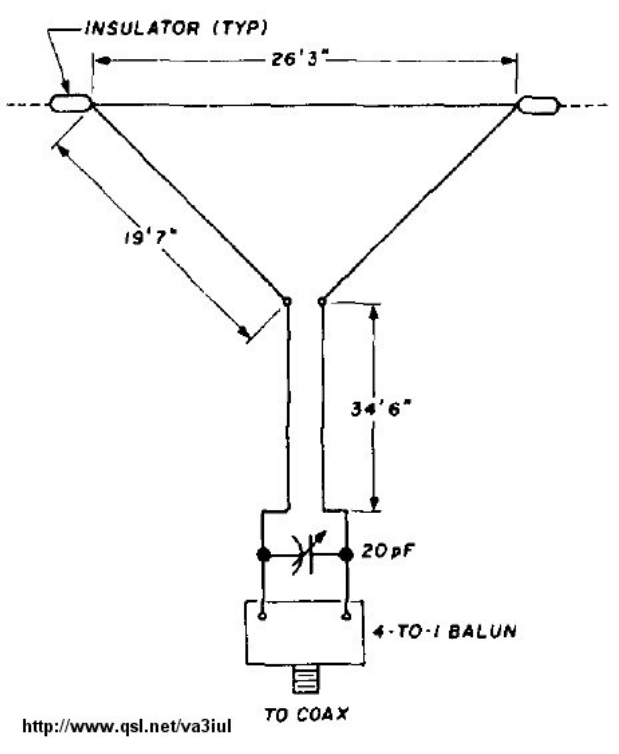

266 - Delta Loop Antenna for 17m

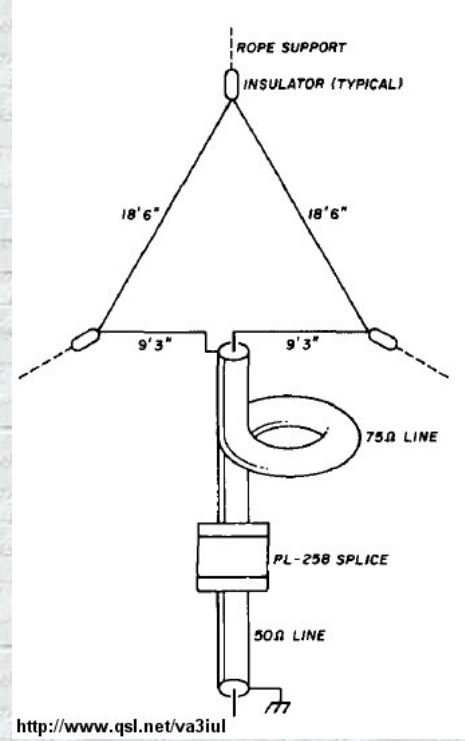

267 - Bi-Square Beam Gain=3dBd for 17m

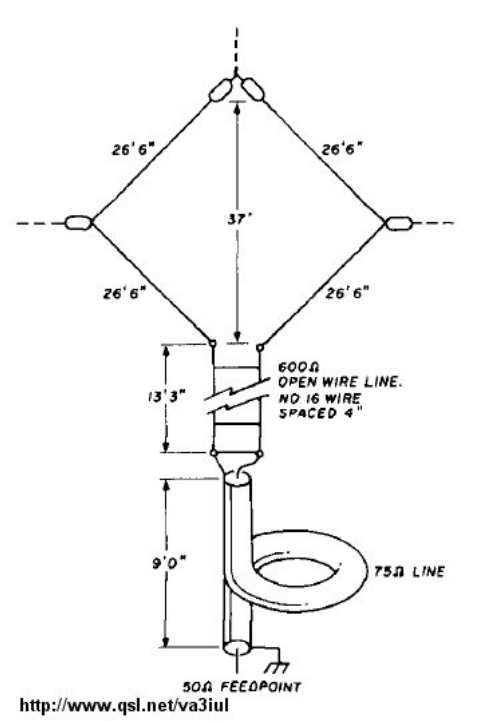

268 -Trap Dipole Antenna for 17m,13m

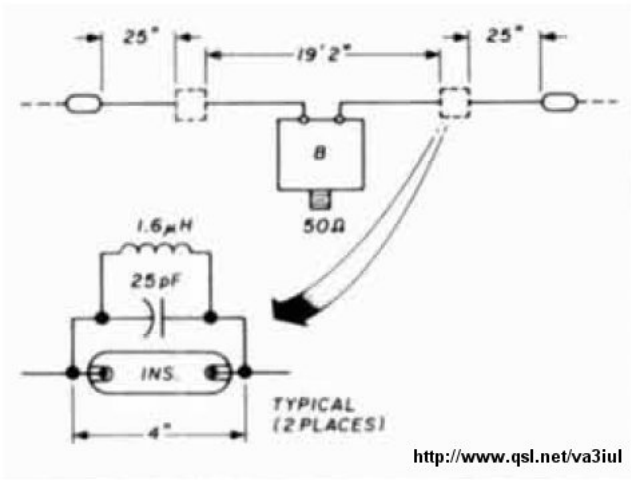

269 - Hanging Unipole Antenna for 160m, 80m

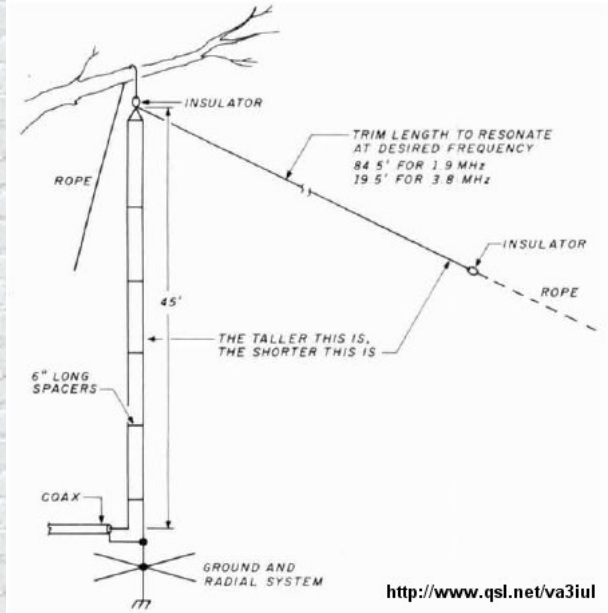

270 - Wideband Sloping Vee Antenna - 30m to 6m

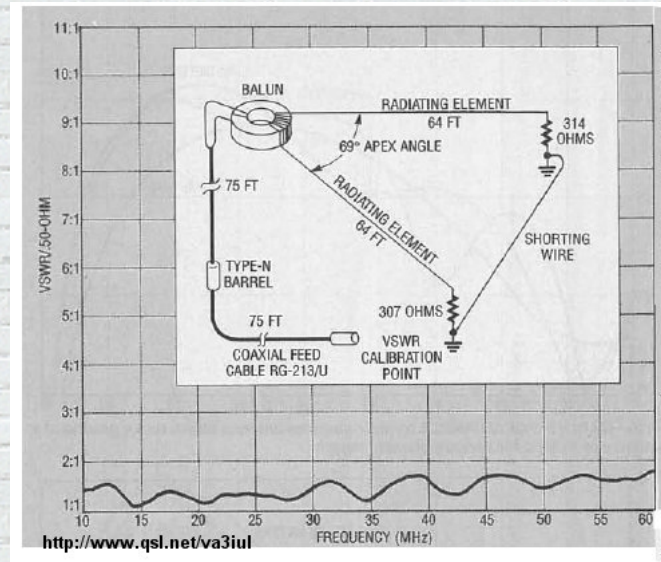

SOURCES OF MATERIALS

The following companies are sources for materials and computer software for this project:

- Toroidal ferrite cores (Part No. FT240-43)—Radio Kit, Inc., P.O. Box 973, Pelham, NH 03076, (603) 635-2235
- Film power resistors—Power Film Systems, Inc., Yellville, AR 72687, (501) 449-4091
- Antenna design software—Phadean Engineering Co., Inc., P.O. Box 611, Shrewsbury, MA 01545, (508) 869-6077
- Phosphor-bronze wire—Astro Industries, Inc., Dayton, OH 43432, (800) 543-5810
- Fiberglass tubing—J. T. Ryerson Co., P. O. Box 1111, Boston, MA 02103. (617) 782-6900

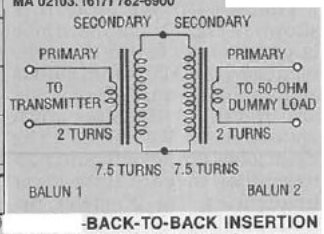

-BACK-TO-BACK INSERTION LOSS TEST of baluns for sloping-vee antenna.

271 - 5/8 Wavelength Antenna

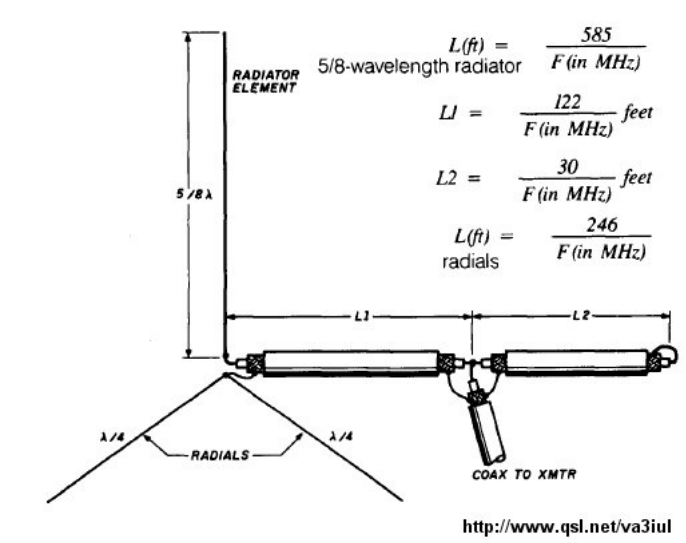

272 - C-Pole Vertical Antenna

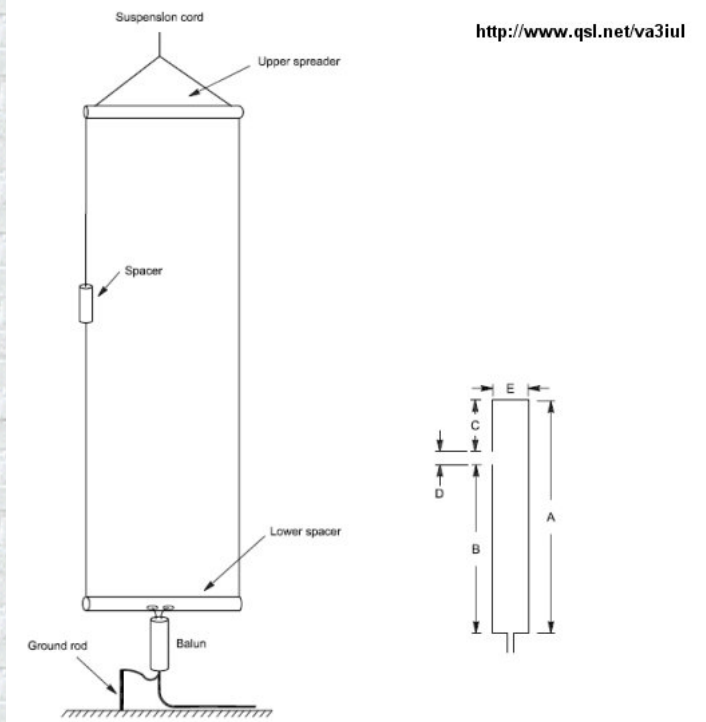

Band (meters)	A (inches)	B (inches)	C (inches)	D (inches)	E (inches)	2:1 SWR bandwidth (kHz)
160	1666	924	994	60	80	58
80	840	460	360	30	40	120
60	591	322	249	20	26	250
40	450	240	190	20	20	260
30	320	167	139	14	14	360
20	177	85	84	8	40	400
15	124	60	60	4	20	600
10	87	46	37	4	20	800

Wire diameter is 1/16-inch. Height of the lower horizontal wire is 12 inches to 24 inches and is non-critical.

273 - Bobtail Antenna for 30m

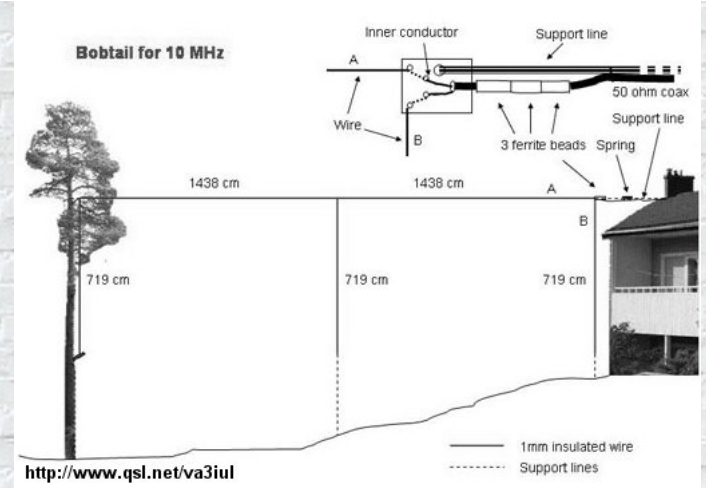

274 - Bobtail Antenna for 40m

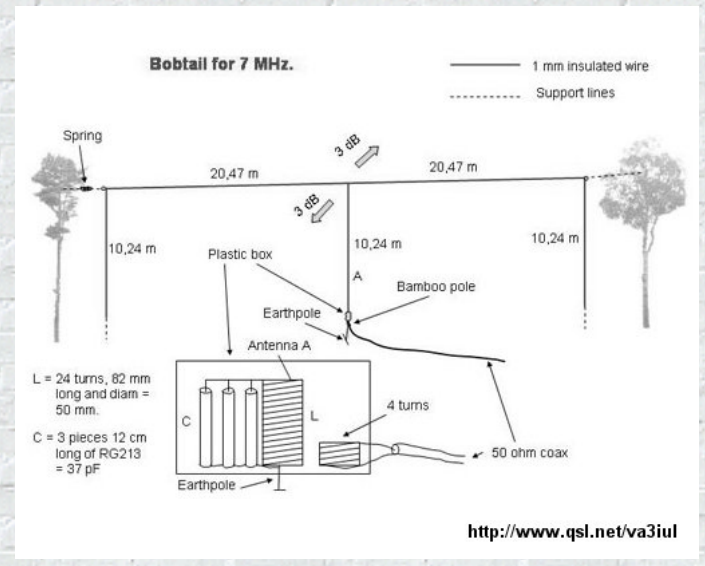

275 - Two Elements Vertical Loop Antenna for 40m

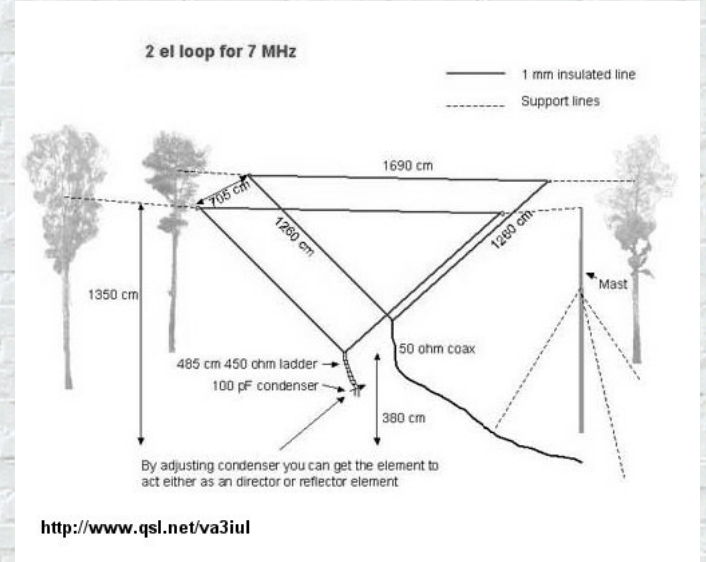

276 - Double Extended Zepp Antenna for 40m

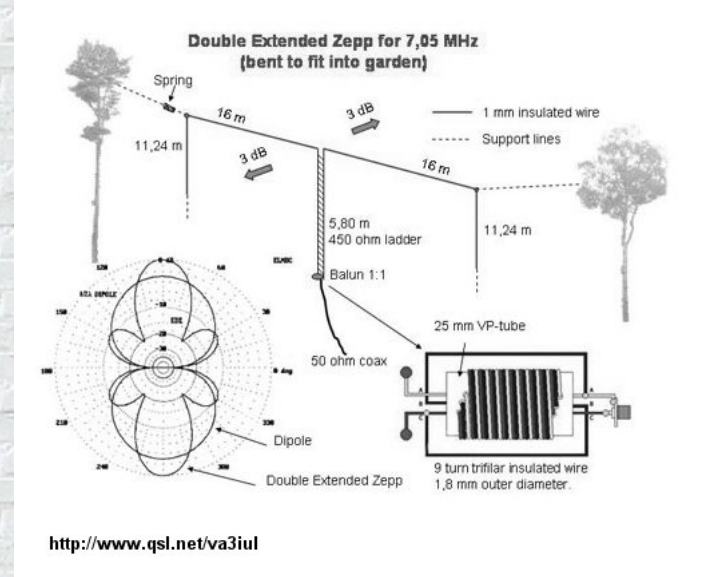

277 - Reversible Moxon Flip Beam for 40m

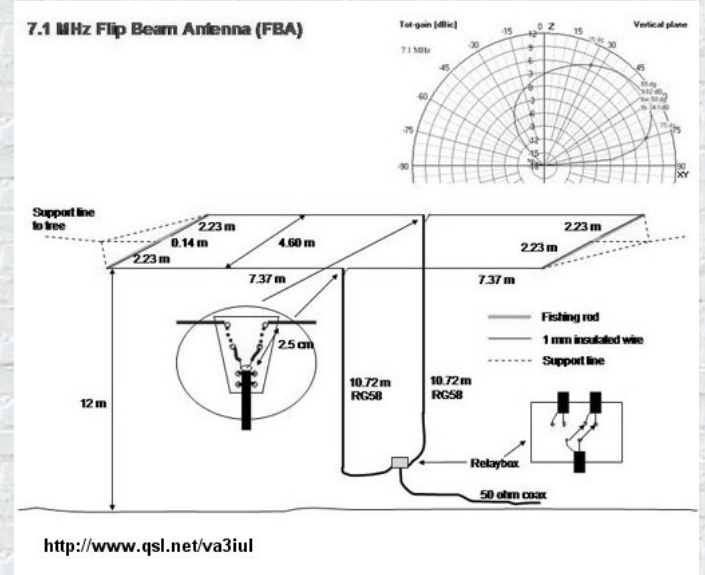

278 - Spitwire Antenna for 40m

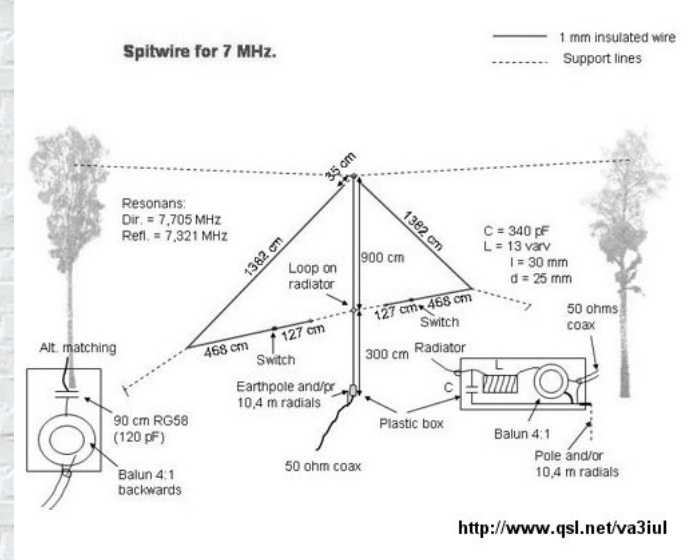

279 - Fork Antenna for 40m

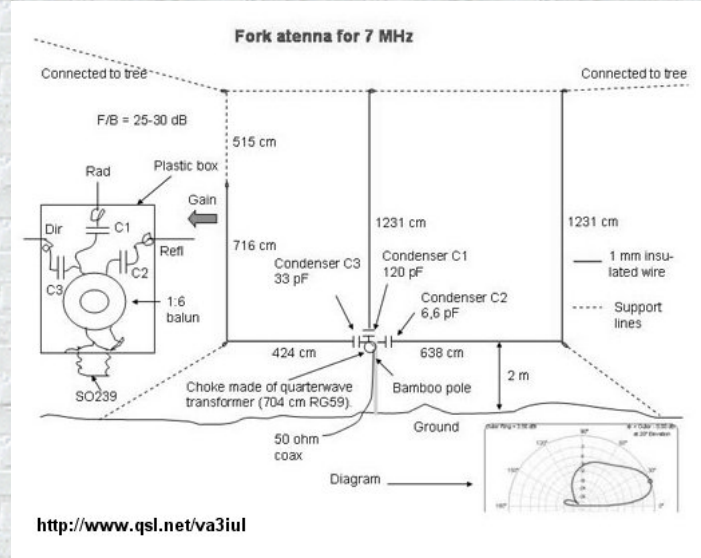

280 - Veebeam Antenna 3dB-Gain for All Bands

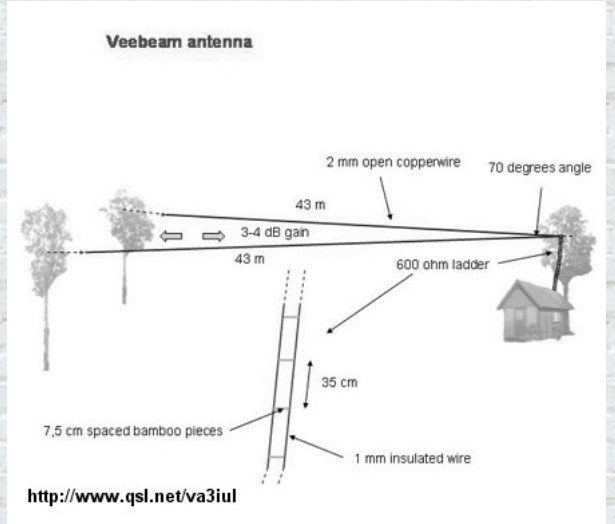

281 - Vertical Moxon Antenna for 10m

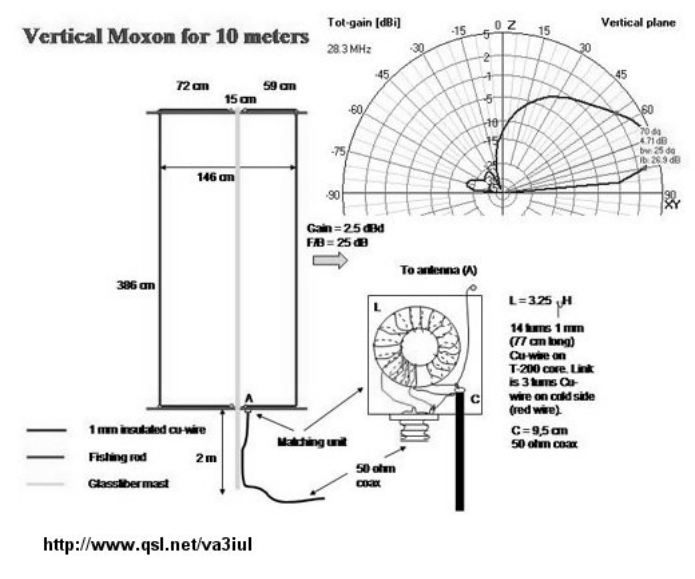

282 - Half-Square Antenna for 30m

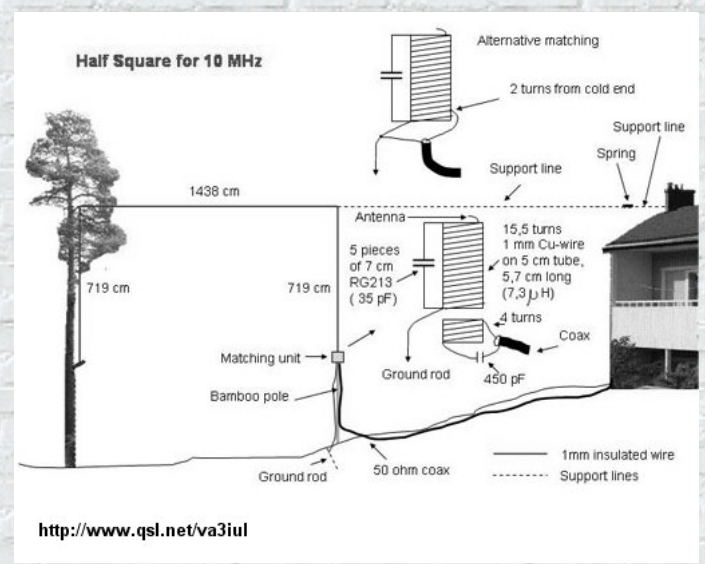

283 - Rotatable Vertical Delta Loop for 20m

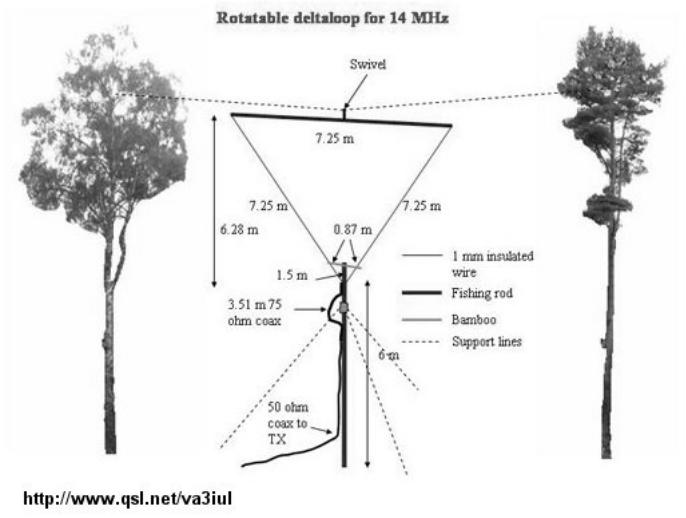

284 - Mini-Horse Antenna 10dB-Gain for 40m-to-2m

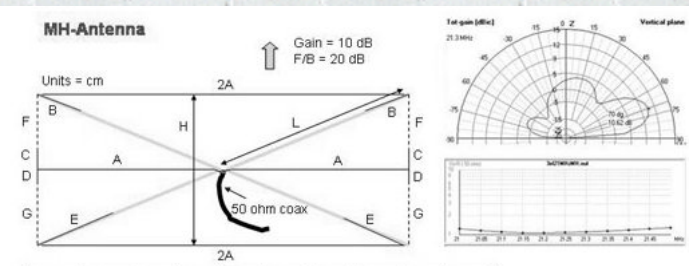

Freq	A	B	C	D	E	F	G	H	L
144	36	12	9	4.5	18	12	16.5	42	41.5
50.1	102.5	33	27	13.5	51	33	46.5	120	119
28.3	182	58	48	24	91	58	82	212	211
24.92	206	65	54	27	102	66	93	240	238
21.2	243	77	64	32	121	77	109	282	281
18.1	285	91	74	37	141	91	128	330	329
14.2	364	116	96	48	181	116	164	424	421
10.1	513	164	136	68	256	164	232	600	594
7.1	728	232	192	96	362	232	328	848	842

1 mm insulated wire
Fishing rod
Support lines

http://www.qsl.net/va3iul

285 - Compact Moxon Antenna 5dB-Gain for 40m

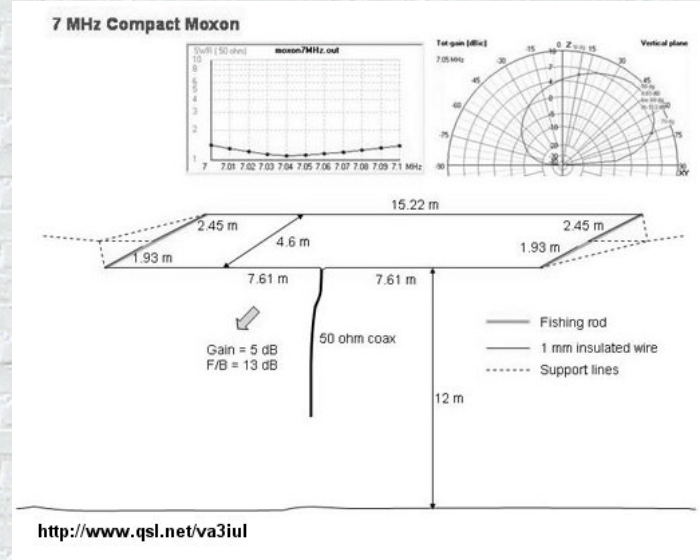

286 - Two Elements Sloping Delta Loop 8dB-Gain for 10m

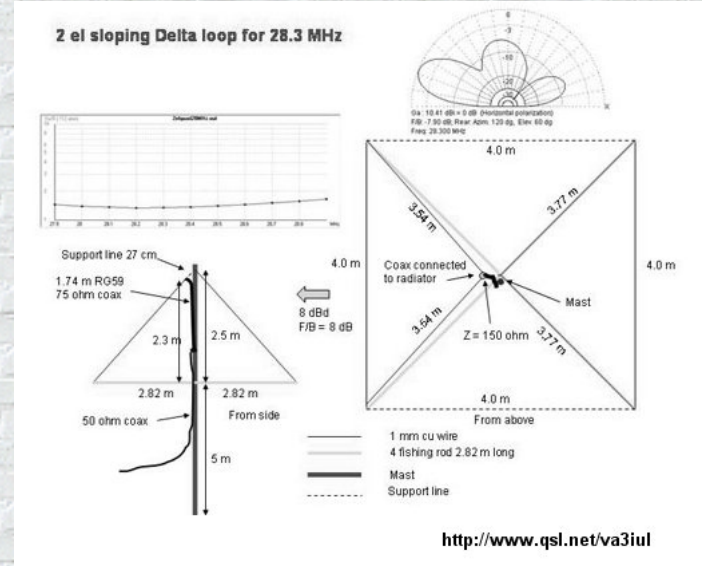

287 - Two Elements Phased Vertical Antenna 3dB-Gain for 40m

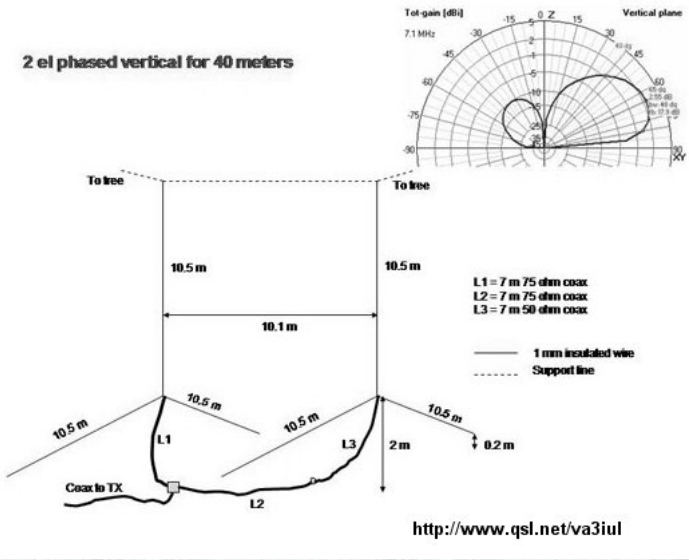

References:

Antenna Toolkit - J. Carr
Practical Antenna Handbook - J. Carr
More Antenna Classics - C. Hutchinson
Amateur Radio Techniques - P. Hawker
The Radio Handbook - W. Orr (editor), 15th edition
The Radio Antenna Handbook - Engineering Staff of "Radio"
Jones Antenna Handbook - Frank C. Jones
SM0DTK - http://www.sm0dtk.se/antennas.htm
ARRL Antenna Handbook 1990-2007
ARRL Handbook 1937-2009
ARRL Antenna Compendium
73 Magazine 1970-2002
Funkamateur Magazine 1990-2011
RSGB Handbook - 2007 - 2010
QST Magazine - 1980 - 2010
Ham Radio Magazine - 1969 - 1990

Radio-Electronics Magazine - 1986 - 1990

home: ***http://www.qsl.net/va3iul***